AS 1742.13—2009

Australian Standard®

Manual of uniform traffic control devices

Part 13: Local area traffic management

STANDARDS
Australia

This Australian Standard® was prepared by Committee MS-012, Road Signs and Traffic Signals. It was approved on behalf of the Council of Standards Australia on 7 October 2009. This Standard was published on 9 November 2009.

The following are represented on Committee MS-012:

- ACT Department of Territory and Municipal Services
- ARRB Transport Research
- Austroads (representative from Department of Transport, Energy and Infrastructure, SA)
- Association of Consultants in Access Australia
- Australian Automobile Association
- Australian Chamber of Commerce and Industry
- Australian Historic Motoring Federation
- Australian Industry Group
- Australian Motorcycle Council
- Commonwealth Department of Infrastructure, Transport, Regional Development and Local Government
- Department of Infrastructure, Planning and Environment (NT)
- Institute of Public Works Engineering Australia
- Main Roads Department, Queensland
- Main Roads Western Australia
- Roadmarking Industry Association of Australia

This Standard was issued in draft form for comment as DR 08226.

Standards Australia wishes to acknowledge the participation of the expert individuals that contributed to the development of this Standard through their representation on the Committee and through the public comment period.

Keeping Standards up-to-date

Australian Standards® are living documents that reflect progress in science, technology and systems. To maintain their currency, all Standards are periodically reviewed, and new editions are published. Between editions, amendments may be issued.

Standards may also be withdrawn. It is important that readers assure themselves they are using a current Standard, which should include any amendments that may have been published since the Standard was published.

Detailed information about Australian Standards, drafts, amendments and new projects can be found by visiting www.standards.org.au

Standards Australia welcomes suggestions for improvements, and encourages readers to notify us immediately of any apparent inaccuracies or ambiguities. Contact us via email at mail@standards.org.au, or write to Standards Australia, GPO Box 476, Sydney, NSW 2001.

Australian Standard®

Manual of uniform traffic control devices

Part 13: Local area traffic management

Originated as AS 1742.13—1991.
Second edition 2009.

Published by Standards Australia GPO Box 476, Sydney, NSW 2001, Australia

ISBN 0 7337 9295 2

PREFACE

This Standard was prepared by Standards Australia Committee MS-012, Road Signs and Traffic Signals to supersede AS 1742.13—1991. It is one in a series of fourteen Standards which together form the *Manual of uniform traffic control devices*. The series comprises the following Standards:

AS		
1742	Manual of uniform traffic control devices	
1742.1	Part 1:	General introduction and index of signs
1742.2	Part 2:	Traffic control devices for general use
1742.3	Part 3:	Traffic control for works on roads
1742.4	Part 4:	Speed controls
1742.5	Part 5:	Street name and community facility name signs
1742.6	Part 6:	Tourist and services signs
1742.7	Part 7:	Railway crossings
1742.9	Part 9:	Bicycle facilities
1742.10	Part 10:	Pedestrian control and protection
1742.11	Part 11:	Parking controls
1742.12	Part 12:	Bus, transit and truck lanes
1742.13	Part 13:	Local area traffic management (this Standard)
1742.14	Part 14:	Traffic signals
1742.15	Part 15:	Direction signs, information signs and route numbering

The principal changes from the previous edition are as follows:

(a) Commentaries on the advantages and disadvantages of various LATM treatments have been deleted. These are amply covered in guidance material such as Austroads; *Guide to Traffic Management—Part 8: Local Area Traffic Management.*

(b) Shared zones have been deleted. They are now covered in AS 1742.4.

(c) Detail on area speed zones has been brought into line with AS 1742.4.

(d) Detail on various aspects of signs and pavement markings has been brought up to date with AS 1742.2, in particular, markings at STOP and GIVE WAY signs.

(e) Sign requirements at entry to and exit from one-way streets have been added.

Statements expressed in mandatory terms in notes to figures are deemed to be requirements of this Standard.

The term ‘normative’ has been used in this Standard to define the application of the appendix to which it applies. A ‘normative’ appendix is an integral part of a Standard.

CONTENTS

Page

FOREWORD 4

SECTION 1 SCOPE AND GENERAL
1.1 SCOPE 5
1.2 REFERENCED DOCUMENTS 5
1.3 DEFINITIONS 6

SECTION 2 LOCAL AREA TRAFFIC MANAGEMENT (LATM) DEVICES
2.1 SCOPE OF SECTION 8
2.2 GIVE WAY SIGNS AND STOP SIGNS 8
2.3 PERIMETER (THRESHOLD) TREATMENTS 9
2.4 ROAD HUMPS 9
2.5 HORIZONTAL DISPLACEMENT DEVICES 10
2.6 MODIFIED INTERSECTIONS 10
2.7 ROAD CLOSURES 10
2.8 MID-BLOCK ISLANDS 11
2.9 ONE-WAY STREETS 11

SECTION 3 APPLICATION OF SIGNS AND MARKINGS TO DEVICES
3.1 SCOPE OF SECTION 12
3.2 GENERAL 12
3.3 SPEED CONTROLS 12
3.4 TYPICAL ARRANGEMENTS FOR LOCAL AREA TRAFFIC MANAGEMENT DEVICES 13

SECTION 4 SIGNS AND PAVEMENT MARKINGS
4.1 SCOPE OF SECTION 26
4.2 REGULATORY SIGNS 28
4.3 WARNING SIGNS 31
4.4 GUIDE SIGNS 33
4.5 UNIDIRECTIONAL HAZARD MARKERS (D4-1-1, D4-1-2) 34
4.6 PAVEMENT MARKINGS 34

APPENDICES
A ILLUMINATION AND REFLECTORIZATION OF SIGNS 38
B INSTALLATION AND LOCATION OF SIGNS 39
C REQUIREMENTS AND GUIDELINES FOR THE DESIGN AND USE OF LATM DEVICES 41

FOREWORD

There is an awareness within the community, of the need to maintain the 'quality of life' on residential streets by creating an environment that discourages unnecessary motorized traffic and inappropriate speeds.

The main traffic objectives of local area traffic management (LATM) are to attain acceptable levels of speed, volume and composition of traffic within the local area and thereby to reduce road crashes and improve the general amenity of the area. These objectives are achieved by modifying the street environment through the installation of various control devices in a traffic management scheme.

Local area traffic management (LATM) devices are generally intended to correct deficiencies in older designs. Their need in new subdivisions can be avoided to a large extent by use of design standards, which are based on modern planning principles.

Advice on procedures for the development of LATM schemes together with guidance on the advantages and disadvantages of the various LATM device covered in this Standard are given in Austroads: *Guide to Traffic Management—Part 8: Local Area Traffic Management.*

The complete signing and marking schemes illustrated in Section 3 for various LATM devices are generally appropriate where the devices are installed in isolation or during staged implementation of an area-wide LATM scheme. As indicated in Section 3, both in the text and on the drawings, many such signs and markings can be omitted when the device is part of a fully implemented area-wide scheme, thus conserving the visual amenity of the area.

Special attention has been given to the development of suitable markings for road humps. The marking shown in Clause 4.6.6 has been developed as a result of supplementary testing of several alternatives by the Australian Road Research Board as reported in Cairney*.

---

* CAIRNEY, P.T., *Further visibility tests for road hump markings*, Melbourne, Australian Road Research Board, 1991, Document WD RS 91/002.

STANDARDS AUSTRALIA

Australian Standard
Manual of uniform traffic control devices

Part 13: Local area traffic management

SECTION 1 SCOPE AND GENERAL

1.1 SCOPE

This Standard describes the following commonly used local area traffic management (LATM) devices:

(a) Perimeter treatments.

(b) Road humps.

(c) Roundabouts.

(d) Driveway links.

(e) Slow points (one lane and two lane).

(f) Modified T-intersections.

(g) Road closures (partial and full closures).

(h) One-way streets.

It also specifies appropriate signs, delineation and pavement markings to be used in association with each device to achieve uniformity of practice in LATM schemes. Guidance is given in appendices on the illumination and reflectorization of signs; on the installation and location of signs and on the design and use of LATM devices.

This Standard is applicable to non-arterial roads in built-up areas.

NOTE: Detailed specifications for the design and manufacture of the signs are given in AS 1743.

1.2 REFERENCED DOCUMENTS

The following documents are referred to in this Standard:

AS

1742		Manual of uniform traffic control devices
1742.2	Part 2:	Traffic control devices for general use
1742.4	Part 4:	Speed controls
1742.5	Part 5:	Street name and community facility name signs
1742.9	Part 9:	Bicycle facilities
1742.10	Part 10:	Pedestrian control and protection
1742.12	Part 12:	Bus, transit and truck lanes
1743		Road signs—Specifications

AS/NZS

1906		Retroreflective materials and devices for road traffic control purposes
1906.1	Part 1:	Retroreflective sheeting

Austroads
Guide to Traffic Management
Part 6: Intersections, interchanges and crossings
Part 8: Local Area Traffic Management

1.3 DEFINITIONS

For the purpose of this Standard the following definitions apply:

1.3.1 Local area

A built-up area containing only local and collector roads, which is bounded by arterial and sub-arterial roads or features such as rivers, railway lines, or the limit of urban development. See Figure 1.1.

1.3.2 Local area traffic management (LATM)

The analysis of traffic characteristics and the implementation of vehicle control measures within local areas.

1.3.3 May

Indicates the existence of an option.

1.3.4 Road classifications (see Figure 1.1)

1.3.4.1 *Arterial road*

A road that predominantly carries through traffic from one region to another.

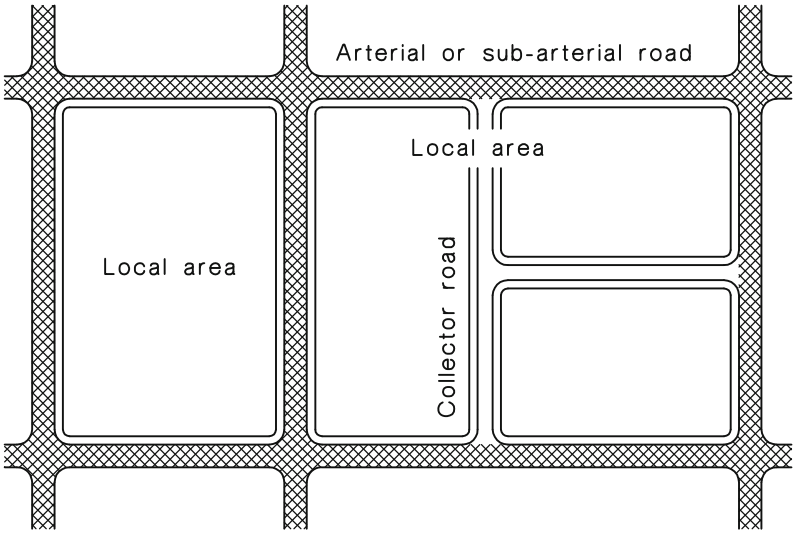

NOTE: Local streets are not shown.

FIGURE 1.1 TYPICAL LOCAL AREA

1.3.4.2 *Sub-arterial road*

A road connecting arterial roads to areas of development, and carrying traffic directly from one part of a region to another.

1.3.4.3 *Collector road*

A non-arterial road that collects and distributes traffic in an area, as well as serving abutting property.

1.3.4.4 *Local street*

A road or street used primarily for access to abutting properties.

1.3.5 Road hump

A raised transverse section of road causing sharp vertical displacement of vehicles, which is provided as a speed reduction (traffic calming) measure.

1.3.6 Roundabout

An intersection laid out for the movement of traffic in one direction around a central island.

1.3.7 Shall

Indicates that a statement is mandatory.

1.3.8 Should

Indicates a recommendation.

1.3.9 Slow point

A section of roadway that has been reduced in width, with or without a sharp kink in alignment, as a speed reduction (traffic calming) measure.

1.3.10 Traffic control device

Any sign, signal, pavement marking or other installation placed or erected by a public authority or official body having the necessary jurisdiction, for the purpose of regulating, warning or guiding road users.

1.3.11 Traffic management classifications

1.3.11.1 *Area speed zone*

A network of roads (e.g. a local area) to which a single speed limit other than the default limit applies and which is signposted (see Clause 3.3).

1.3.11.2 *Isolated*

A term used to describe a device such as a road hump or slow point that is installed in isolation rather than as part of an area-wide traffic management scheme. A device may also be isolated if it is built as the first part of a staged traffic management scheme.

1.3.11.3 *Perimeter*

The outer extremity of a local area, across which vehicles travel to enter or leave the local area.

SECTION 2 LOCAL AREA TRAFFIC MANAGEMENT (LATM) DEVICES

2.1 SCOPE OF SECTION

This Section specifies the devices commonly used in LATM schemes. Requirements and guidelines for the design and use of LATM devices are given at Appendix C.

Users of this Standard should take account of the need for consultation with residents and occupiers of a local area, and with special interest groups such as emergency or public transport services, before implementing an LATM scheme, or installing LATM devices.

In locations where normal street lighting may provide inadequate illumination, the need to provide additional lighting at LATM devices should be considered.

2.2 GIVE WAY SIGNS AND STOP SIGNS

2.2.1 Purpose

GIVE WAY signs and STOP signs are used to control traffic at intersections other than those controlled by means of roundabouts or traffic signals, by allocating priority to traffic on one of the intersecting roads.

These signs are provided as follows:

(a) GIVE WAY signs shall be provided at all intersections with four or more legs to assign vehicle priorities.

(b) GIVE WAY signs shall be provided at any three-way intersection where the layout is such that it is not clear how or whether the T-intersection rule would operate, for example, at a Y-intersection.

(c) GIVE WAY signs shall be used for road safety reasons at unsignalized exits from local areas to arterial roads despite operation of the T-intersection rule.

(d) STOP signs shall be provided instead of GIVE WAY signs on any controlled approach where intersection sight distance is substandard as determined in accordance with AS 1742.2. STOP signs shall not be used where intersection sight distance is adequate for use of GIVE WAY signs.

2.2.2 Application

GIVE WAY and STOP sign control at an intersection needs to be applied in the simplest manner practicable. To achieve this, the following should be met:

(a) Every controlled intersection should have exactly two uncontrolled legs, which together form the major road through the intersection.

(b) The major road through the intersection either—

  (i) should be on a straight or substantially straight alignment; or

  (ii) if on a curved alignment, should have pavement markings, kerbs or other indications aligned in such a way that its path is clearly defined.

Where other than a simple control pattern is unavoidable, consideration should be given to modifying the intersection as set out in Clause 2.6.

2.3 PERIMETER (THRESHOLD) TREATMENTS

Perimeter (threshold) treatments as shown in Figure 3.1 may be used at the perimeter of a local area to inform road users that they are entering a slow speed environment (LATM scheme) and that they can expect to encounter other devices in the area. The signs Speed Limit AREA (R4-10) and END Speed Limit AREA (R4-11) shall be used at perimeter (threshold) treatments, if required, to create an area speed zone (see Clause 3.3 and Figure 3.1). Requirements and recommendations for area speed zones are given in AS 1742.4. The LOCAL TRAFFIC ONLY (G9-40-1) sign may also be used for the purpose given in Clause 4.4.2.

Contrasting pavement material shall not be placed in positions where a change in surface texture could adversely affect turning bicycles or motorcycles.

2.4 ROAD HUMPS

2.4.1 General

The function of a road hump is to reduce vehicle speeds by causing occupant discomfort when the hump is traversed at a speed above its design speed.

2.4.2 Hump profiles

This Standard specifies two varieties of road hump as follows:

(a) The 'Watts' profile, which has a circular arc cross-section and is of fixed length (in the direction of travel), 3.7 m approximately, and height 90 to 100 mm (see Figure 3.2).

(b) The 'flat-top' hump of height 90 to 100 mm, ramps of gradient between 1:12 and 1:15 and a length (in the direction of travel) of the flat-top section of 2.0 m minimum (see Figure 3.3).

Road hump profiles are illustrated in Figure C1, Appendix C.

NOTES:

1 Hump profiles that differ from the above may not be effective in controlling vehicle speeds.

2 A different profile is used for the raised pedestrian crossing (zebra) or 'wombat crossing', see AS 1742.10.

2.4.3 Installation

Road humps should be constructed substantially at right angles to the travelled path and should extend as close to the kerb as possible but leave sufficient opening for drainage. Road humps should be clearly visible to approaching motorists and illuminated by street lighting. The approach face of each hump shall be marked as specified in Clause 4.6.6.

2.4.4 Spacing

The first road hump in a group shall be placed so that it can be clearly seen and where the approach speed of vehicles is naturally low.

If low speeds are required over an appreciable length of road, more than one road hump may be required. The spacing between successive humps should be as uniform as possible, with due allowance for side roads, private driveways and other turning traffic. Spacings should usually be in the range of 80 to 120 m. Spacings greater than 120 m may allow speeds between the humps to rise to unacceptable levels.

NOTE: Guidelines for the location and siting of road humps are given in Appendix C.

2.5 HORIZONTAL DISPLACEMENT DEVICES

2.5.1 Roundabouts

A roundabout visually defines an intersection. It reduces speeds and simplifies the allocation of priorities. Typical roundabouts are illustrated in Figures 3.4 and 3.5.

A roundabout should always operate according to driver expectations. Any device that looks like a roundabout should operate like one. Conversely, if a device is intended to operate as a roundabout it should quite clearly appear to have the expected shape of a roundabout.

2.5.2 Slow points

Slow points are usually formed by mid-block kerb extensions. They are designed to provide a visual and physical break-up of the continuity of the street and to reduce vehicle speeds. They are normally designed to create a roadway constriction equivalent to two vehicles parked on opposite sides of the street. Additional design features that may be included are—

(a) an angled passageway between kerb extensions;

(b) a road hump in combination; or

(c) a median island if two-way traffic is to be catered for.

Typical slow points are illustrated in Figures 3.6, 3.8 and 3.9.

2.5.3 Driveway links

A driveway link is an extended form of slow point, often extending for at least one and sometimes two or three residential frontages. It provides an even greater visual and physical break-up of the continuity of the street, and somewhat greater scope for landscaping. Passing points may be required along the link if it is either of excessive length, or if it is curved such that approaching drivers cannot see to the far end.

A typical driveway link is illustrated in Figure 3.7.

2.6 MODIFIED INTERSECTIONS

As indicated in Clause 2.2.2, GIVE WAY or STOP sign control at an intersection needs to be applied in as simple a manner as possible so that drivers on all approaches can clearly appreciate which is the major road through the intersection, and so that it is clear to drivers on controlled approaches, the stream to which they are required to give way.

If complex controls are unavoidable, and alternative treatments (e.g. a roundabout) are not appropriate, consideration should be given in the first instance to modifying the intersection by the construction or relocation of kerbs, median or channelizing islands, widened pavement, or a combination of these, so that the path of the major road through the intersection is clearly defined. A typical modified intersection treatment is illustrated in Figure 3.10.

2.7 ROAD CLOSURES

Road closures are usually used to inhibit or prevent the use of some streets in a local area by through traffic. They can also be used to eliminate or modify intersections that have a crash history and where other remedial treatments are not practicable or appropriate. Types of closure include the following:

(a) Partial closure, whereby access across the closure is restricted both by kerb rearrangement and regulatory control, to one direction only.

(b) Diagonal closure, whereby a diagonal barrier is placed across a cross-intersection, converting it into two separate curved streets with intersection conflicts eliminated at that point.

(c) Full closure, whereby a street with access at both ends is converted into a cul-de-sac.

Typical road closures are illustrated in Figure 3.11.

2.8 MID-BLOCK ISLANDS

Mid-block islands may be used within a local area as an additional type of horizontal displacement device or slow point. They can also be useful as a refuge for pedestrians and cyclists on busier streets. Where an island is likely to be used by pedestrians it is important that the view between approaching drivers and pedestrians on or near the island is not obstructed, e.g. by signs or vegetation.

2.9 ONE-WAY STREETS

One-way streets may be used in local areas to discourage the use of local roads by through traffic. They may also be appropriate where roadways are considered too narrow to carry two-way traffic safely. The signposting at entry to and exit from one-way streets is shown in Figure 3.12.

On long one-way streets the ONE WAY (repeater) sign, R2-17, may be required. This sign shall not be placed closer than 20 m in advance of any intersection.

If two-way bicycle traffic is permitted, the supplementary plate BICYCLES EXCEPTED (R9-3) is placed below all relevant regulatory signs.

SECTION 3 APPLICATION OF SIGNS AND MARKINGS TO DEVICES

3.1 SCOPE OF SECTION

This Section illustrates the general application of signs and pavement markings at or near typical LATM devices. It also sets out criteria by which some signs and markings can be omitted when a fully developed area-wide scheme is in place.

3.2 GENERAL

As the primary aim of any LATM scheme is to improve the safety and amenity of the local area, the traffic control devices used shall be designed and positioned so that both their presence and the appropriate way to negotiate them are clearly evident to approaching road users. An LATM scheme shall be applied only to local areas in which all roads and streets have a speed limit of 50 km/h or less (see Clause 3.3).

If an LATM device is part of a fully developed area-wide LATM scheme, certain signs and markings may be omitted. These are indicated in the descriptions or the arrangement diagrams for each device.

Despite the foregoing, full signing and marking shall be provided for any device that may not be visible to approaching drivers at prevailing traffic speeds under all reasonably expected weather conditions.

During staged construction of a scheme, all signs and markings shall be provided for each LATM device until the scheme is fully developed.

If an LATM device is found to require substantial signing to guide motorists through it, thought should be given to simplifying the device.

Signs that are intended to convey messages during the hours of darkness shall be illuminated or reflectorized (see Appendix A).

Appendix B contains requirements and guidance on the installation and location of signs.

NOTE: Advice on procedures for the development of LATM schemes together with guidance on the advantages and disadvantages of the various LATM devices covered in this Standard are given in Austroads: *Guide to Traffic Management—Part 8: Local Area Traffic Management*.

3.3 SPEED CONTROLS

If an LATM scheme has been implemented within a local area and this area has clearly defined boundaries, traffic speeds may be controlled if required to less than the default built-up area limit of 50 km/h by means of an area speed zone. This is effected by use of the signs Speed Limit AREA (R4-10) and END Speed Limit AREA (R4-11) at each entry/exit point on the boundary as shown in Figure 3.1.

Where an area speed zone is to be imposed, it shall be in accordance with AS 1742.4. The speed limit should be selected to be consistent with the geometry of the roads in the area and the environmental treatment so that there is a general perception that it is a reasonable travel speed in the area.

Arterial and sub-arterial roads shall not be included in any area speed zone with a limit less than 50 km/h.

3.4 TYPICAL ARRANGEMENTS FOR LOCAL AREA TRAFFIC MANAGEMENT DEVICES

Signing and marking treatments for the various types of LATM devices are illustrated in Figures 3.1 to 3.12, as follows:

Figure 3.1 Perimeter (threshold) treatment

Figure 3.2 Watts profile road hump

Figure 3.3 Flat-top road hump

Figure 3.4 Local street roundabout

Figure 3.5 Small diameter roundabout

Figure 3.6 Single-lane slow point

Figure 3.7 Driveway link

Figure 3.8 Single-lane angled slow point

Figure 3.9 Two-lane angled slow point

Figure 3.10 Modified T-intersection

Figure 3.11 Road closures

Figure 3.12 Entry and exit at one-way streets

These treatments are typical for isolated devices. The notes to the figures show signs and other devices that may be omitted when the device is part of a fully implemented area-wide scheme.

Signs at or in the vicinity of LATM devices shall be coordinated with other street furniture to ensure that—

(a) intersection sight distance is not affected at critical locations;

(b) the signs are not obscured by other street furniture; and

(c) as much use as possible is made of existing poles and other street furniture for mounting signs so as to avoid unnecessary additional posts and unsightly clutter.

This is particularly important where signs may need to be carefully placed with respect to traffic signals (on the perimeter of the local area), lighting columns, electrical distribution poles or trees.

Several of the figures illustrate the use of raised reflective pavement markers (RRPMs) for one or other of the purposes listed in Clause 4.6.7. Since these devices are optional in any LATM application, they are not necessarily shown in all of the places where they might be used.

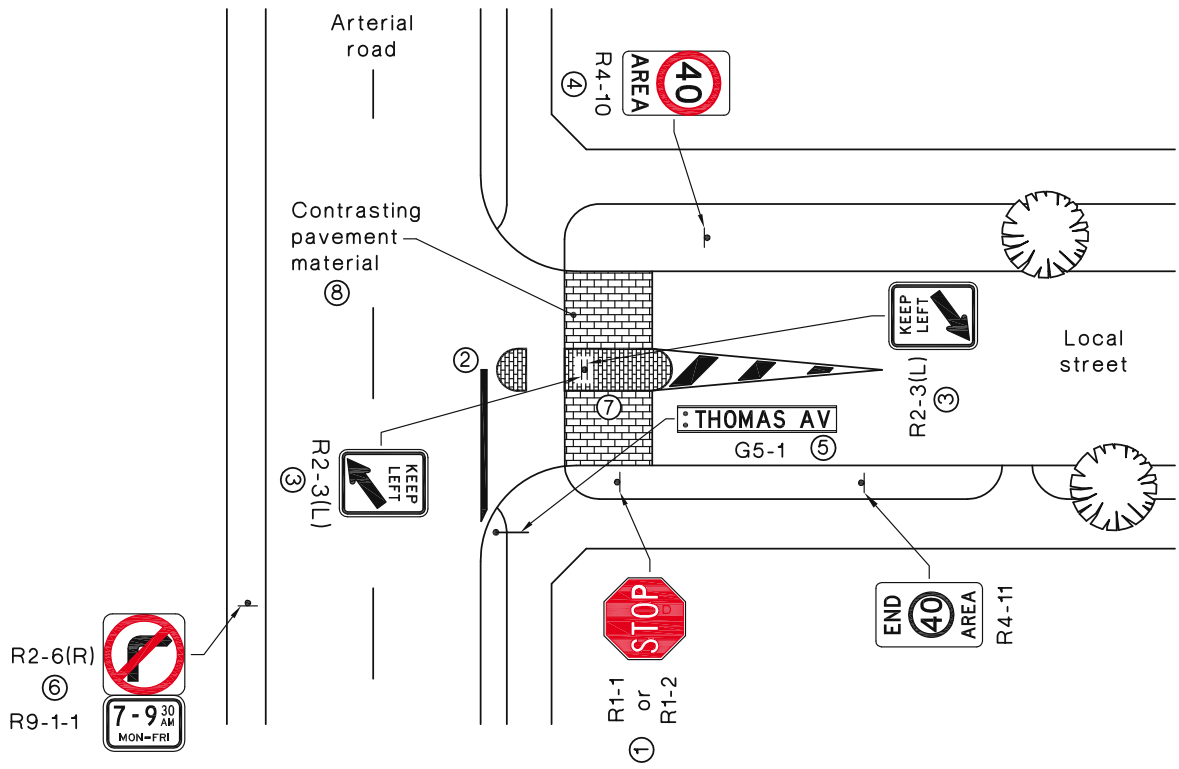

NOTES:

1 Refer to Clause 2.2 regarding the use of STOP signs and GIVE WAY signs.

2 The design of these treatments should allow for safe turns from the arterial road.

3 Sign R2-3(L) may not be necessary where the island is clearly visible and traffic is clearly required to pass to the left of it on one or both approaches.

4 Refer to Clause 3.3 regarding the use of area speed zones. The Truck Prohibition sign, R6-10-2, or the UNSUITABLE FOR LARGE VEHICLES sign, G9-41, may be required. Use of Truck Prohibition sign, R6-10-2, is specified in AS 1742.12.

5 For details of the design and use of Street Name signs, refer to AS 1742.5.

6 The No Right (Left) Turn sign, R2-6(R) or R2-6(L), together with an appropriate Times of Operation module, e.g. R9-1-1, may be required to prohibit use of local streets as peak-hour short cuts.

7 A walk-through gap should be provided in the median island.

8 Contrasting pavement material should have similar skid resistance to surrounding pavement for the benefit of bicycles and motorcycles.

FIGURE 3.1 PERIMETER (THRESHOLD) TREATMENT

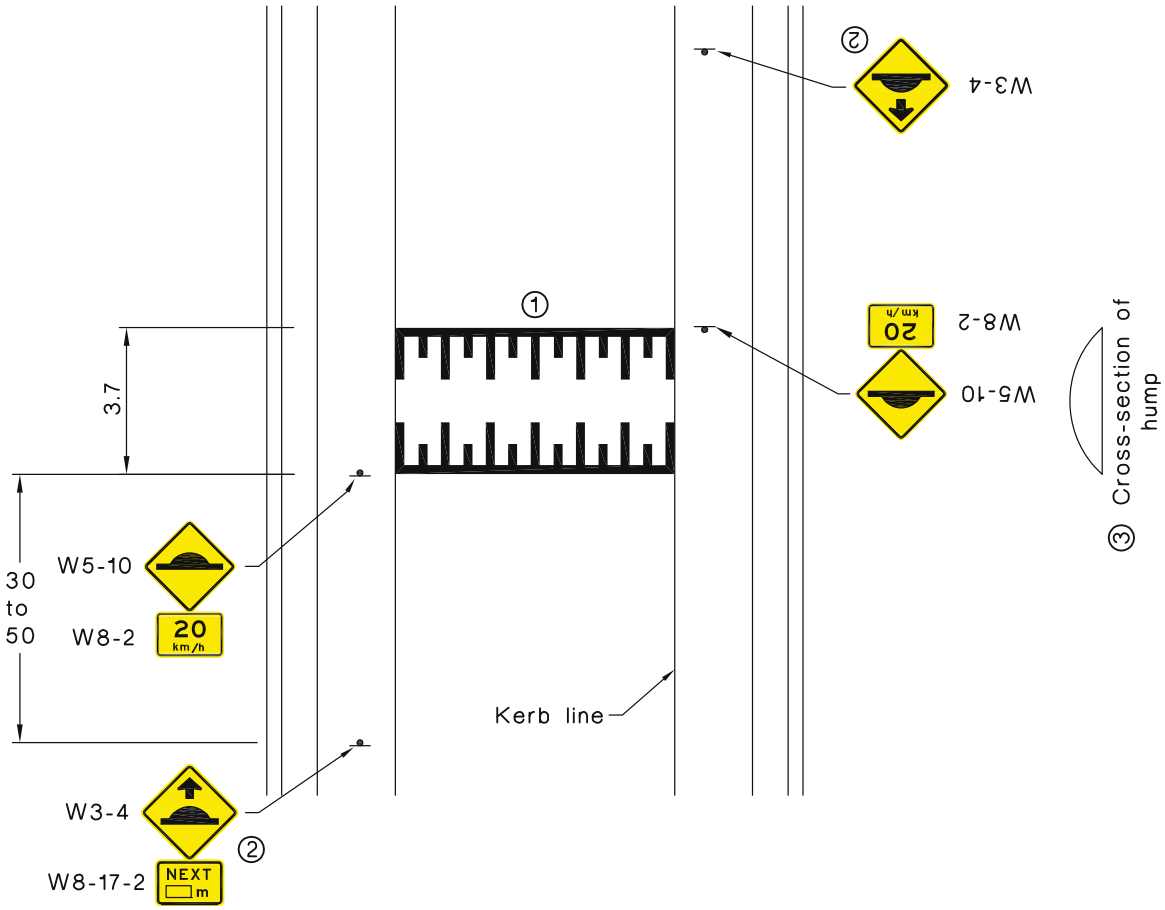

NOTES:

1 For details of road hump line marking, refer to Clause 4.6.6.

2 Sign W3-4 is used in advance of an isolated road hump installation. Sign W8-17-2 is added if it is the first hump in a series. These signs are not generally required when the hump is part of an area-wide scheme.

3 The hump profile is shown in Appendix C.

4 The hump may be supplemented with kerb extensions, e.g. of the type illustrated in Figure 3.6.

DIMENSIONS IN METRES

FIGURE 3.2 WATTS PROFILE ROAD HUMP

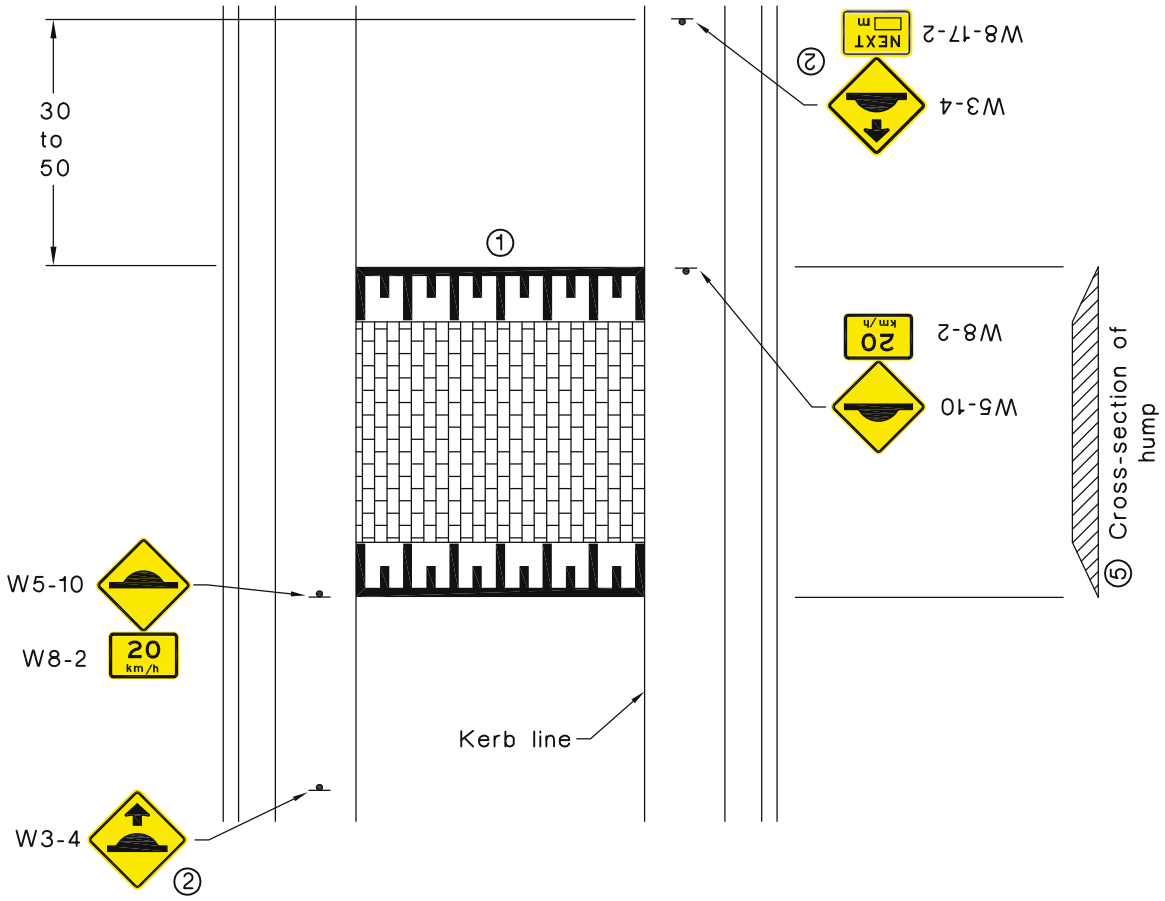

NOTES:

1 For details of road hump line marking, refer to Clause 4.6.6.

2 Sign W3-4 is used at an isolated hump installation. Sign W8-17-2 is added if it is the first hump in a series. These signs are not generally required when the device is part of an area-wide scheme.

3 The hump may be supplemented with kerb extensions, e.g. of the type illustrated in Figure 3.6.

4 If the device is to be a raised pedestrian crossing (zebra) (i.e. a 'wombat crossing') it is to be constructed, pavement marked and signed in accordance with AS 1742.10.

5 The road hump profile is shown in Appendix C.

DIMENSIONS IN METRES

FIGURE 3.3 FLAT-TOP ROAD HUMP

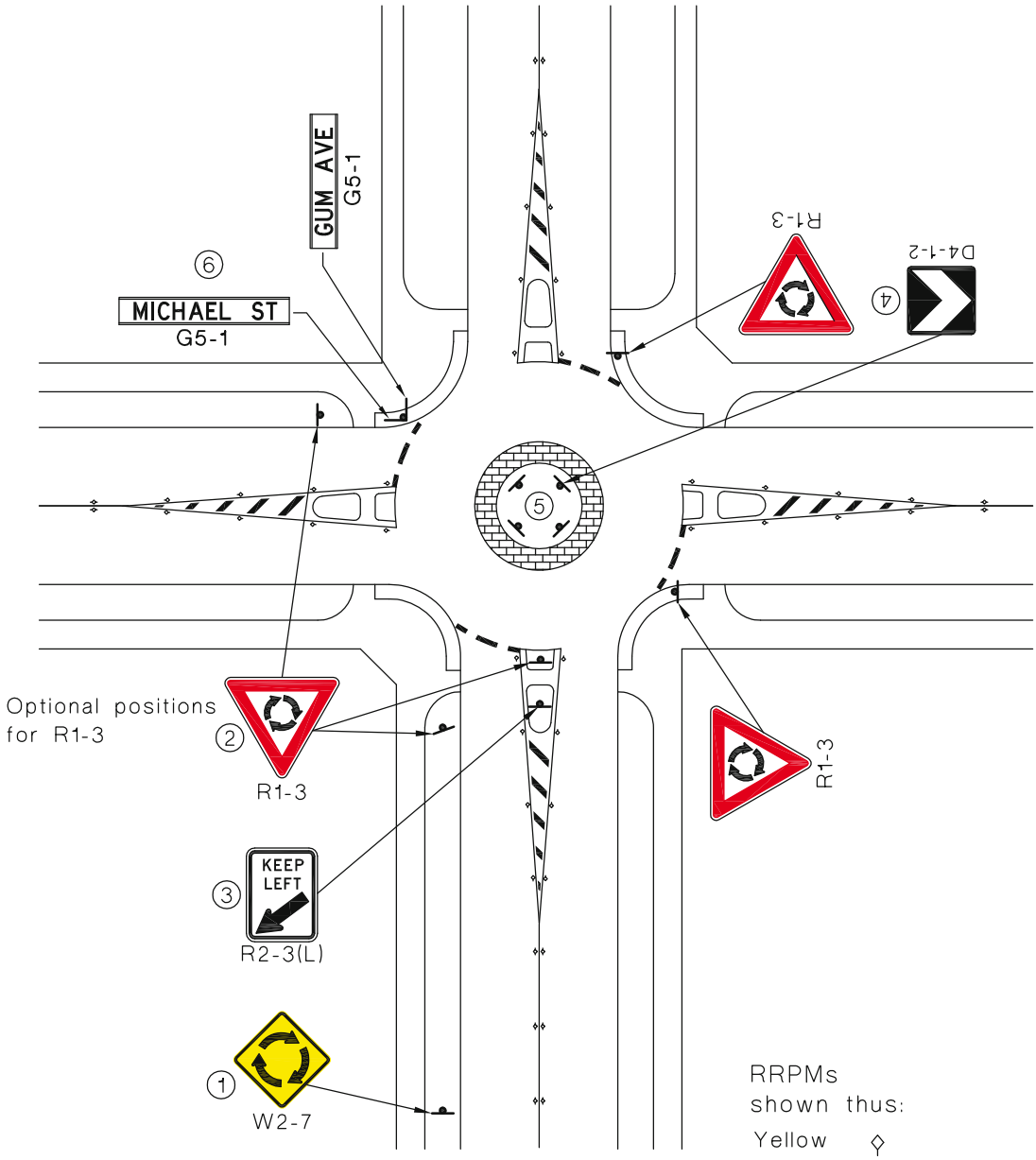

NOTES:

1 Sign W2-7 may not be required in local streets, and should only be used where there is poor visibility to the roundabout from one or more approaches.

2 Sign R1-3 is placed on one or both sides of an approach as needed to provide maximum conspicuity for approaching drivers.

3 Sign R2-3(L) may not be necessary where traffic is clearly required to pass to the left of the island.

4 The Hazard markers D4-1-2 may be omitted if the central island is fully mountable or if there is an alternative retroreflective delineation of the island (e.g. with RRPMs) together with a high level of street lighting.

5 Landscaping in the central island should not be high enough to restrict visibility across the island.

6 For details of the design and use of Street Name signs, refer to AS 1742.5.

FIGURE 3.4 LOCAL STREET ROUNDABOUT

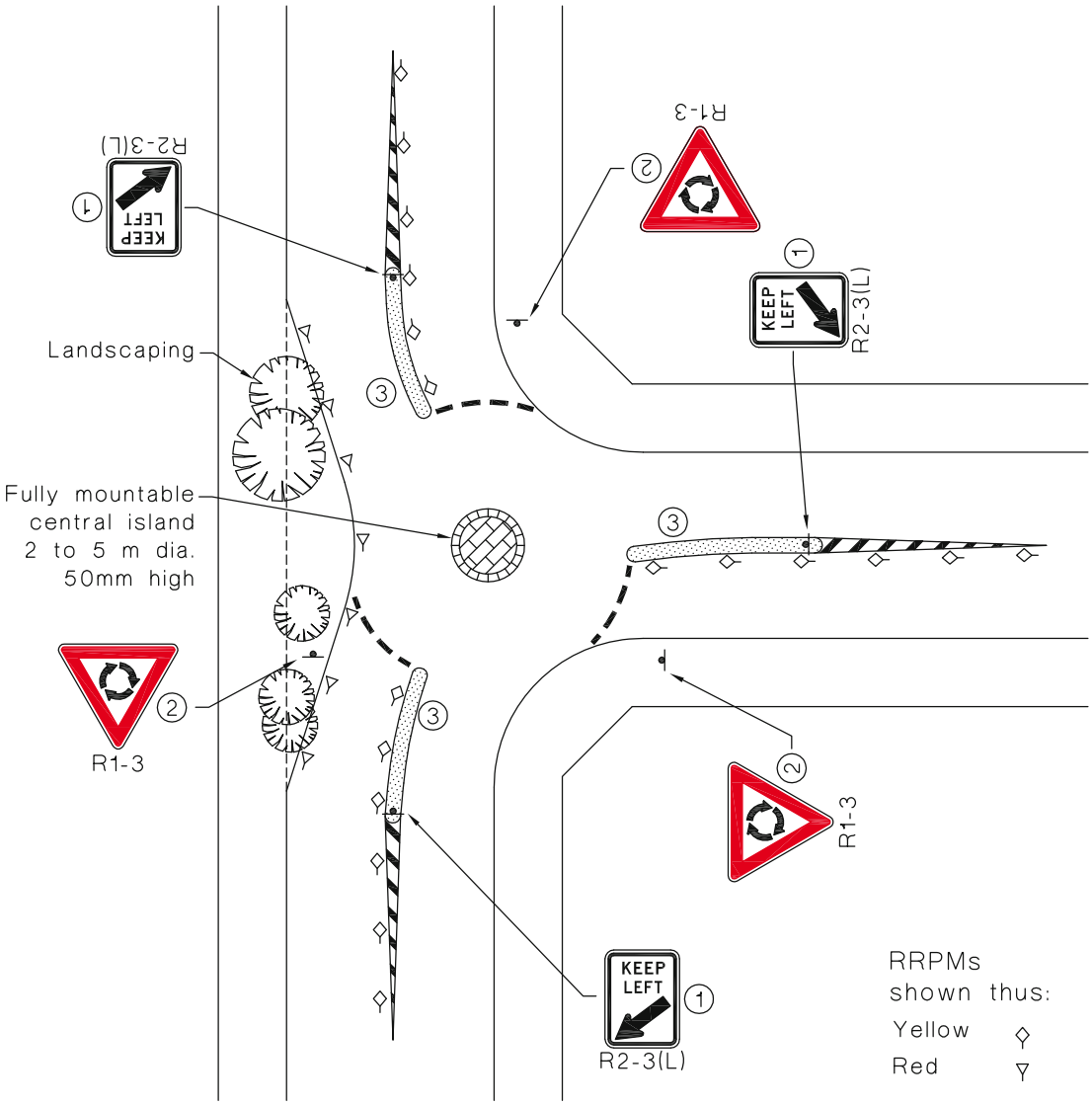

NOTES:

1 Sign R2-3(L) may not be necessary where traffic is clearly required to pass to the left of the island.

2 Sign R1-3 should be placed to create maximum conspicuity for approaching drivers.

3 Walk-through gaps at pavement level may be provided in median islands.

FIGURE 3.5 SMALL DIAMETER ROUNDABOUT

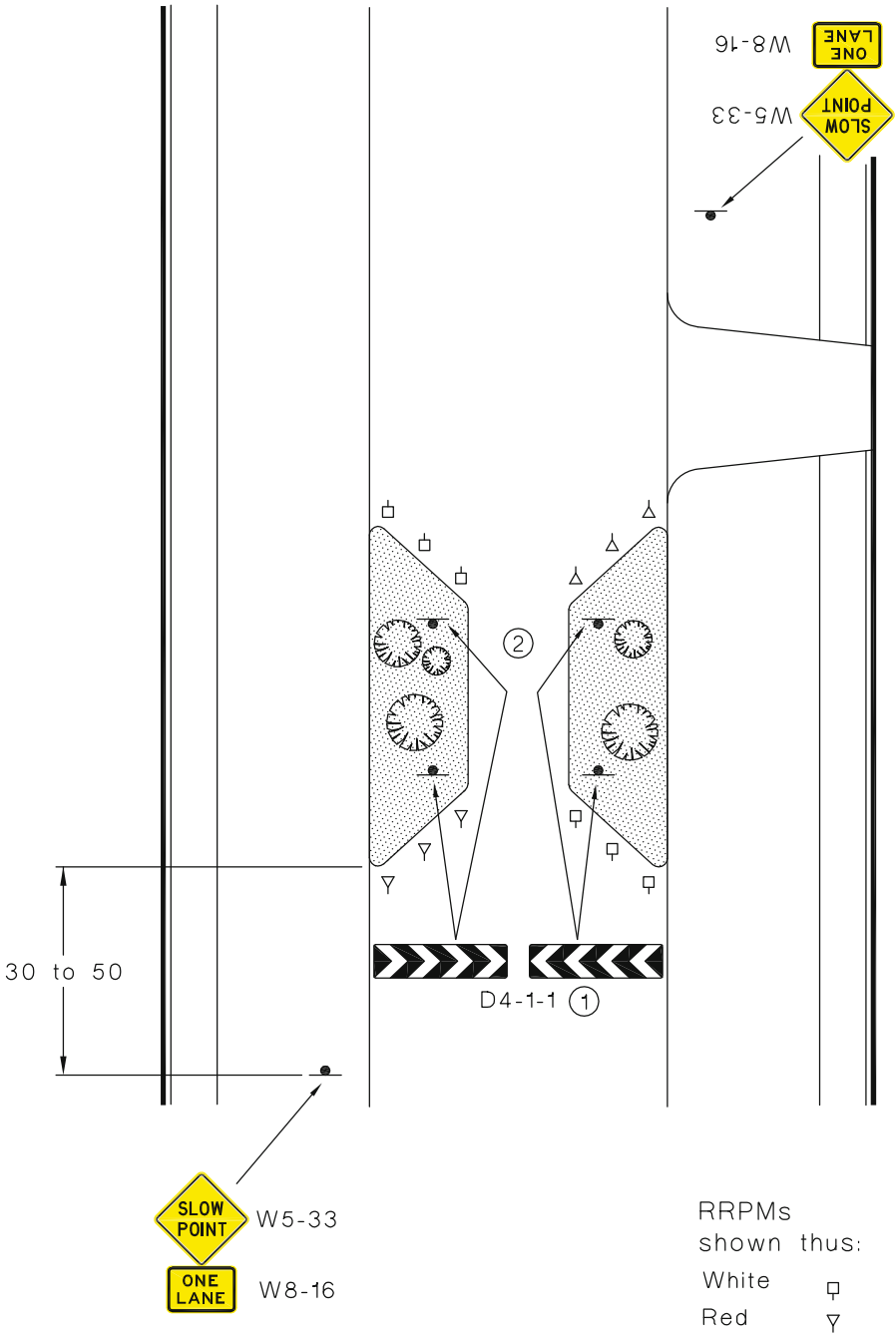

NOTES:

1 Hazard markers D4-1-1 may be replaced with one or more smaller hazard markers D4-1-2. Hazard markers may be omitted if the treatment is part of an area-wide scheme and there is adequate lighting and visibility to the start of the treatment, or if the island is intended to be fully mountable. See also Appendix C, Paragraph C1(c).

2 To achieve satisfactory speed reduction, it may be necessary to incorporate a road hump in this device. If so, and if signs are required, the signing arrangement is in accordance with Figures 3.2 and 3.3.

DIMENSIONS IN METRES

FIGURE 3.6 SINGLE-LANE SLOW POINT

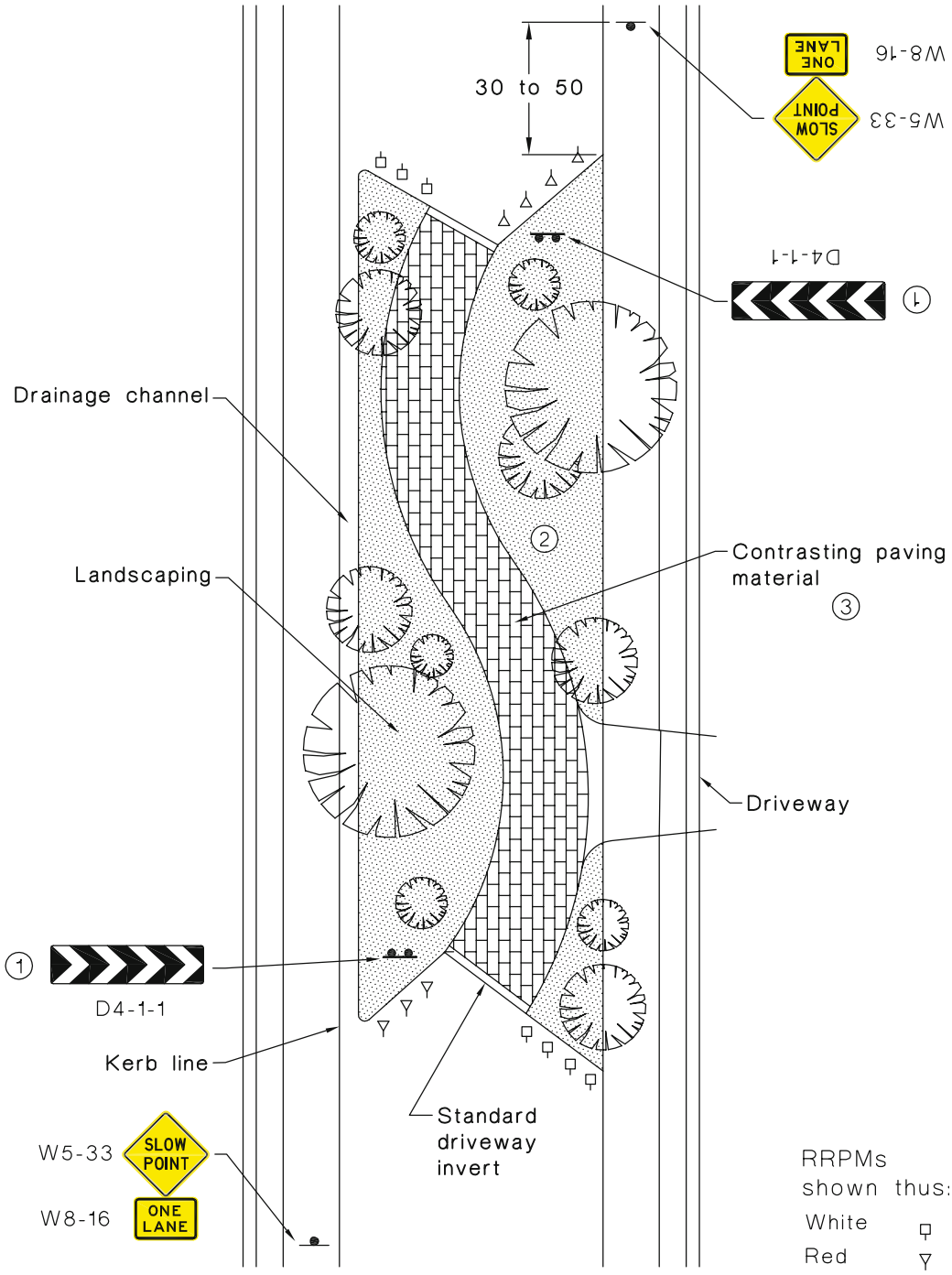

NOTES:

1 Hazard markers D4-1-1 may be replaced with one or more smaller hazard markers D4-1-2. Hazard markers may be omitted if the treatment is part of an area-wide scheme and there is adequate lighting and visibility to the start of the treatment, or if the island is intended to be fully mountable. See also Appendix C, Paragraph C1(c).

2 Passing points may be required if the link is excessively long or drivers are not able to see from one end to the other.

3 Contrasting pavement material should have similar skid resistance to surrounding pavement for the benefit of bicycles and motorcycles.

DIMENSIONS IN METRES

FIGURE 3.7 DRIVEWAY LINK

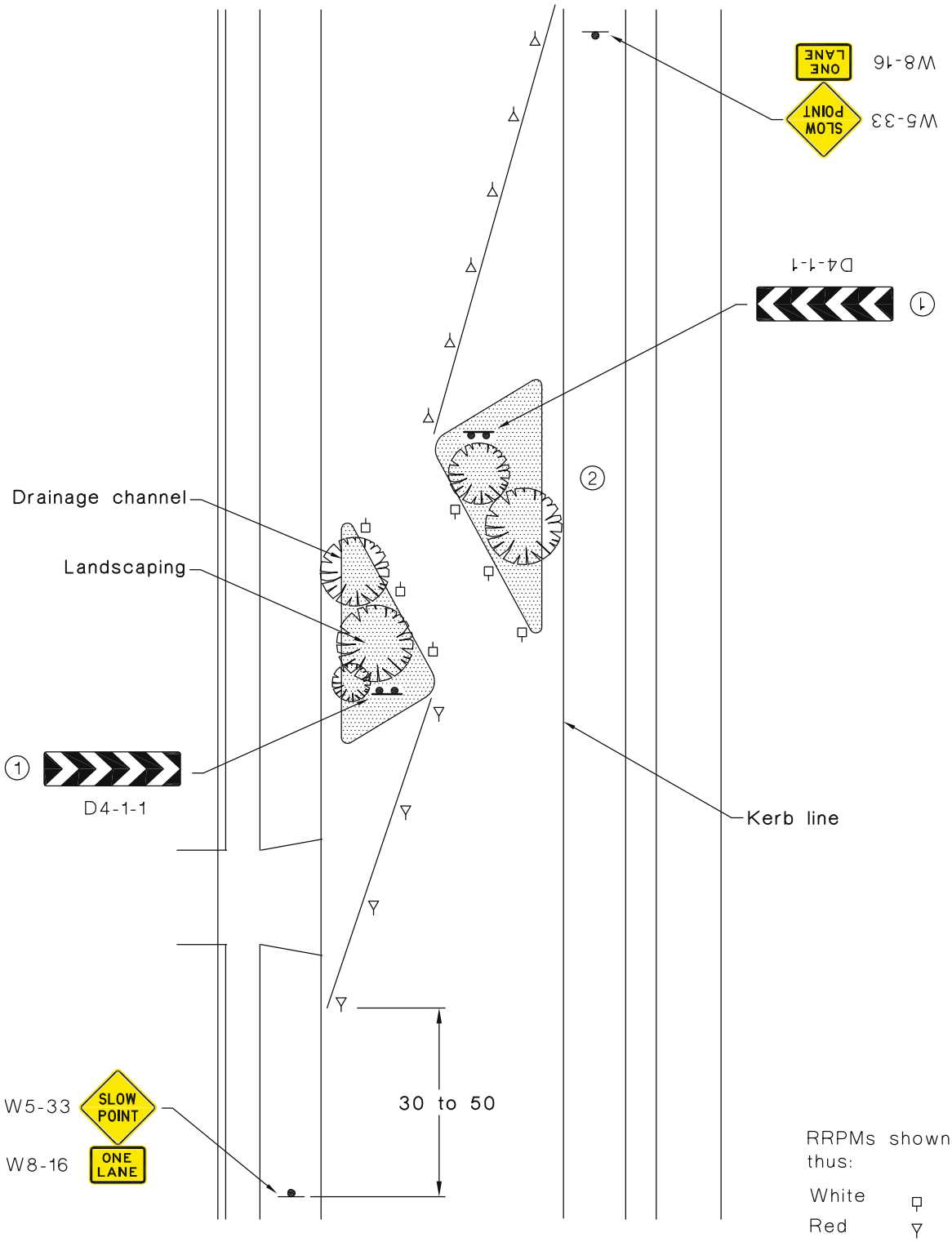

NOTES:

1 Hazard markers D4-1-1 are not generally required when the treatment is part of an area-wide scheme. See also Appendix C, Paragraph C1(c).

2 Special consideration should be given to the provision of safe passage for bicycles. If provided behind the slow point, it should be able to be kept free from rubbish.

DIMENSIONS IN METRES

FIGURE 3.8 SINGLE-LANE ANGLED SLOW POINT

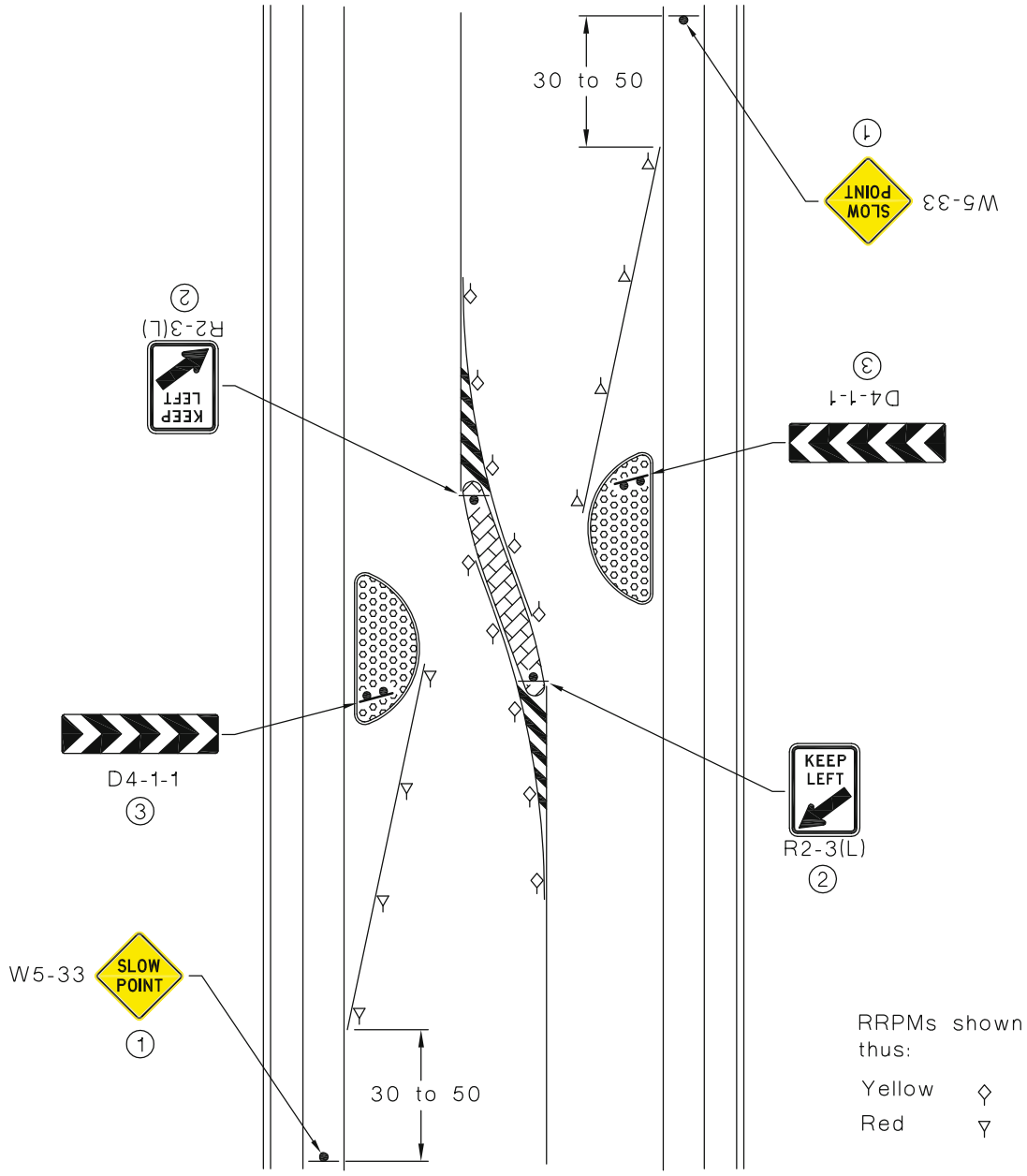

NOTES:

1 Sign W5-33 is not generally required when the treatment is part of an area-wide scheme.

2 Sign R2-3(L) may not be necessary where traffic is clearly required to pass to the left of the island.

3 Hazard markers D4-1-1 may be replaced with one or more smaller hazard markers D4-1-2. Hazard markers may be omitted if the treatment is part of an area-wide scheme and there is adequate lighting and visibility to the start of the treatment, or if the island is intended to be fully mountable. See also Appendix C, Paragraph C1(c).

DIMENSIONS IN METRES

FIGURE 3.9 TWO-LANE ANGLED SLOW POINT

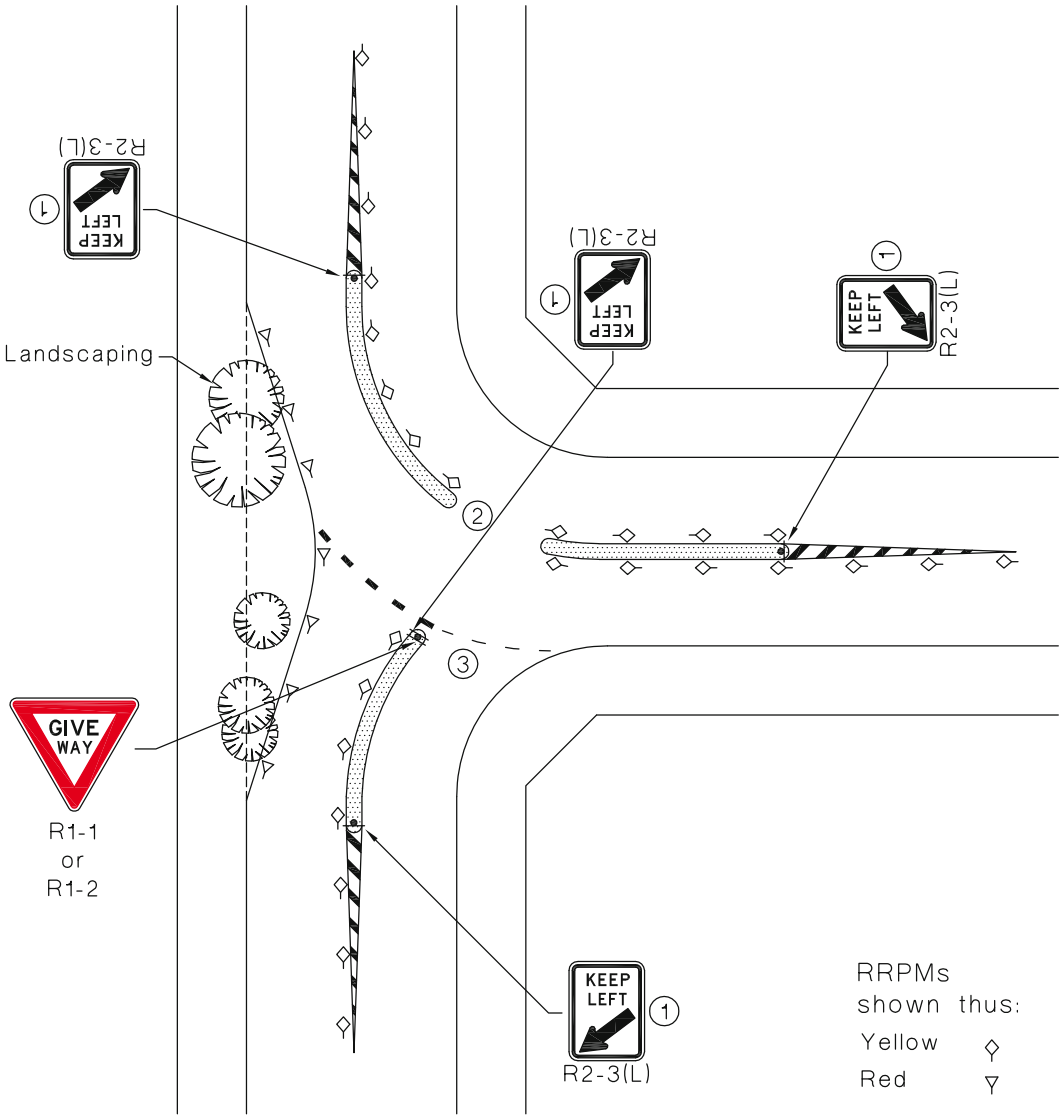

NOTES:

1 Sign R2-3(L) may not be necessary where traffic is clearly required to pass to the left of the island.

2 Drivers making a right turn from the through route must be slowed and deflected by a raised island to emphasize that they are making a right turn and need to give way to oncoming traffic.

3 Continuity line, if needed, to delineate the outside of the curve.

FIGURE 3.10 MODIFIED T-INTERSECTION

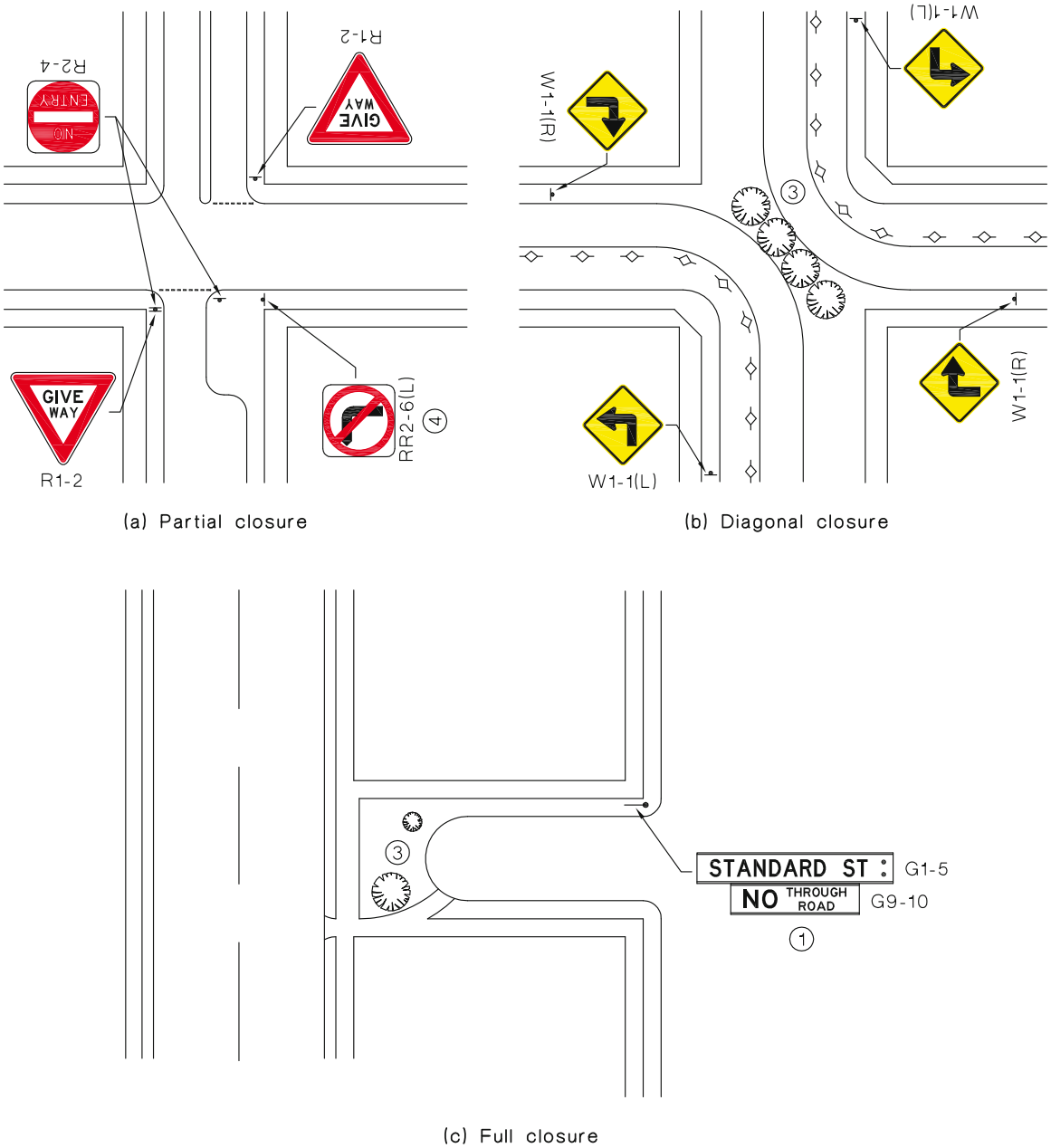

NOTES:

1 Refer to AS 1742.5 for details of street name signing.

2 Provision for pedestrians, cyclists and emergency vehicles should be considered at all road closures. Provision by means of appropriate signs specified in AS 1742.9, may be required.

3 Hazard markers (e.g. D4-1-1) may be required within the landscaped area until landscaping is fully established.

4 The Turn Restriction sign should be provided if the NO ENTRY or ONE WAY signs are not visible to a driver before making a potential wrong way turn.

FIGURE 3.11 ROAD CLOSURES

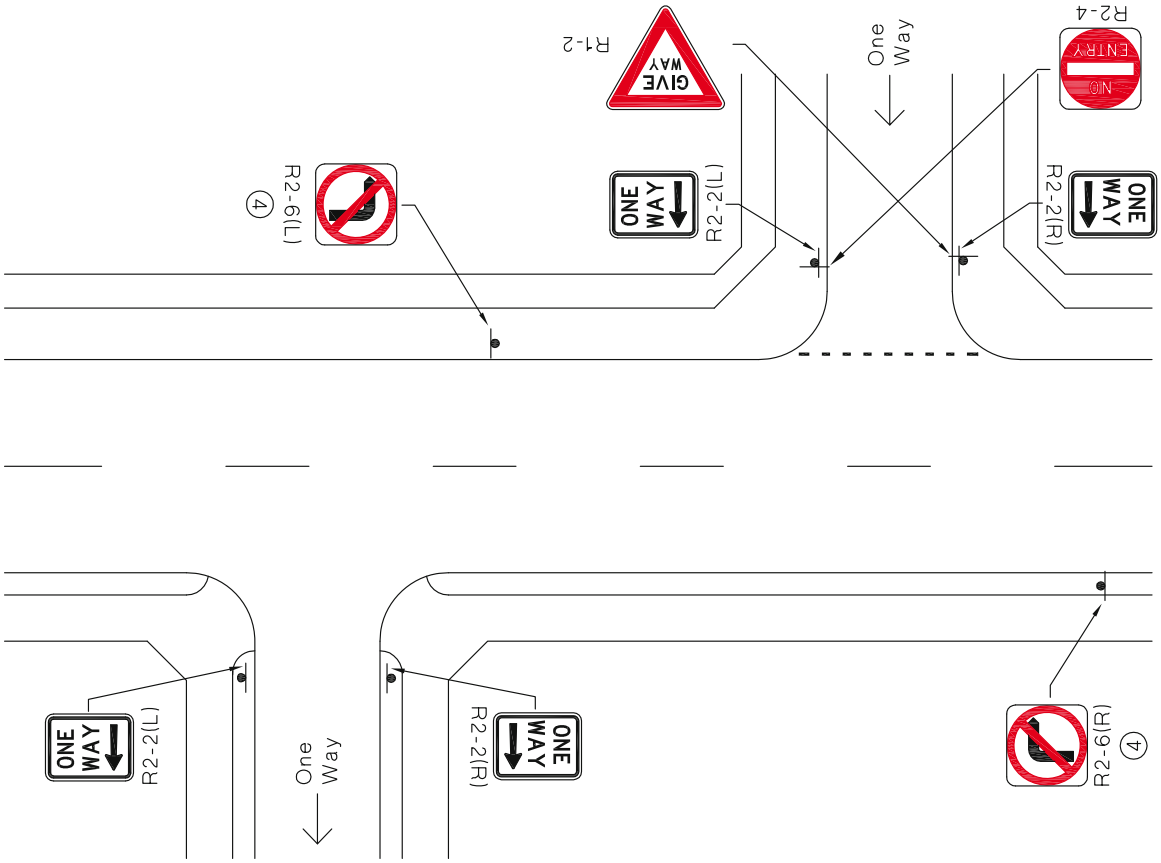

NOTES:

1 ONE WAY (R2-2 (L, R)) and NO ENTRY (R2-4) signs should be located so as to be visible to a driver before making a potential wrong-way turn.

2 On long one-way streets the ONE WAY repeater sign R2-17 may be required.

3 If two-way bicycle traffic is permitted, the supplementary plate BICYCLES EXCEPTED (R9-3) is placed below each of the relevant regulatory signs.

4 The Turn Restriction sign should be provided if the NO ENTRY or ONE WAY signs are not visible to a driver before making a potential wrong way turn.

FIGURE 3.12 ENTRY AND EXIT AT ONE-WAY STREETS

SECTION 4 SIGNS AND PAVEMENT MARKINGS

4.1 SCOPE OF SECTION

This Section specifies the signs and pavement markings to be used for delineating LATM devices and for directing and controlling traffic in LATM schemes as follows:

(a) Regulatory signs (Clause 4.2).

(b) Warning signs (Clause 4.3).

(c) Guide signs (Clause 4.4).

(d) Hazard markers (Clause 4.5).

(e) Pavement markings (Clause 4.6).

Signs used to control vehicle movements in LATM schemes are listed in Table 4.1.

Applications of signs and markings to devices are illustrated in Section 3.

TABLE 4.1

SIGNS USED IN LOCAL AREA TRAFFIC MANAGEMENT SCHEMES

Sign	Sign number	Size mm
STOP	R1-1A R1-1B	600 × 600 750 × 750
GIVE WAY	R1-2A R1-2B	750 height 900 height
Roundabout	R1-3A R1-3B	750 height 900 height
ONE WAY (L or R)	R2-2A (L, R) R2-2B (L, R)	450 × 600 600 × 800
KEEP LEFT	R2-3A (L) R2-3AA(L)*	450 × 600 300 × 400
NO ENTRY	R2-4A R2-4B	450 × 450 600 × 600
No Left (Right) Turn	R2-6A R2-6B	450 × 450 600 × 600
All Traffic Turn	R2-14A R2-14B	600 × 800 900 × 1200
ONE WAY (Repeater)	R2-17	450 × 750
Speed Restriction	R4-1A R4-1B	450 × 600 600 × 800
Speed Limit AREA END Speed Limit AREA	R4-10 } A R4-11 } B	450 × 750 600 × 1000
Times of Operation modules	R9-1-1A R9-1-1B R9-1-2A R9-1-2B	450 × 300 600 × 400 450 × 450 600 × 600
BICYCLES EXCEPTED	R9-3A R9-3B	450 × 300 600 × 400
Turn Roundabout Ahead Road Humps Ahead Road Hump SLOW POINT	W1-1 W2-7 W3-4 W5-10 W5-33 } A, B	600 × 600 750 × 750
Advisory Speed	W8-2A W8-2B	600 × 400 750 × 500
ONE LANE	W8-16A W8-16B	600 × 400 750 × 500
NEXT . . . . . m	W8-17-2A W8-17-2B	600 × 400 750 × 500
NO THROUGH ROAD	G5-10	850 × 200
LOCAL TRAFFIC ONLY	G9-40-1	900 × 600
UNSUITABLE FOR LARGE VEHICLES	G9-41A G9-41B	450 × 300 600 × 400
Unidirectional Hazard markers	D4-1-1 D4-1-2A D4-1-2B	1600 × 400 450 × 450 600 × 600

* The R2-3AA(L) sign is for use only in local streets in accordance with Clause 4.2.5.

4.2 REGULATORY SIGNS

4.2.1 GIVE WAY (R1-2)

R1-2

GIVE WAY signs shall be used as set out in Clause 2.2.

Signs shall be erected as close as practicable to and not more than 9 m from the edge of the intersecting roadway. Where a sign-controlled road intersects at an acute angle, the sign should be placed so that its face is not prominently in the view of road users on the through roadway.

GIVE WAY signs shall be supplemented with the pavement markings shown in Clause 4.6.4.

4.2.2 STOP (R1-1)

R1-1

STOP signs shall be used as set out in Clause 2.2.

They shall be positioned in accordance with the requirements for GIVE WAY signs (see Clause 4.2.1) and shall be supplemented with the pavement markings shown in Clause 4.6.4.

4.2.3 Roundabout (R1-3)

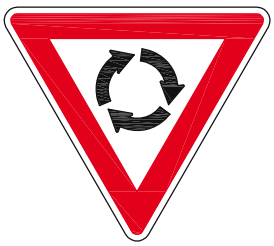

R1-3

The Roundabout sign shall be used on the immediate approach to roundabouts to indicate that traffic entering the roundabout must give way to traffic already within the roundabout. It shall be erected on all approaches, and should be located as near as practicable to the associated give-way line (see Clause 4.6.4) at the entry point to the roundabout.

4.2.4 ONE WAY (R2-2(L))

R2-2(L)

The ONE WAY sign is used to indicate a roadway on which vehicular traffic is allowed to travel in one direction only.

ONE WAY signs shall be located at the beginning of a one-way roadway or street and shall be repeated at intermediate intersections with that street. Signs are generally required on both sides of the roadway to ensure that at least one sign is clearly visible on any approach to the street.

4.2.5 KEEP LEFT (R2-3(L))

R2-3(L)

The KEEP LEFT sign may be used where a physical obstruction exists, e.g. traffic island or median, and it is necessary for all vehicles approaching such an obstruction to pass it to the left. The sign is not required if the obstruction is readily visible to approaching drivers under all conditions and it is clear that all traffic passing the obstruction must pass to the left of it.

The sign should be located at least 600 mm beyond the approach end of the obstruction. In certain circumstances it may be necessary to place it at a greater distance, especially where the approach end tapers to a narrow point, or the sign is vulnerable to turning traffic.

A small version of this sign, R2-3AA(L), is available for use on narrow medians (450 mm) where adequate delineation of the median by other means cannot be achieved.

4.2.6 NO ENTRY (R2-4)

R2-4

The NO ENTRY sign is used at the termination of a one-way roadway to prohibit access from the wrong direction.

At the end of a one-way street, NO ENTRY signs shall be erected at the intersection facing in the opposite direction to the one-way flow. The signs may need to be located a short distance into the one-way street if there is a possibility of drivers becoming confused as to which street is closed to entry. Sufficient signs shall be erected to ensure that at least one is clearly visible to drivers approaching from any direction, and some signs may have to be set at an angle to achieve this purpose.

4.2.7 No Left Turn (R2-6(L)), No Right Turn (R2-6(R))

R2-6(L)

R2-6(R)

The No Left Turn or No Right Turn sign is used at intersections where vehicles are forbidden to make a turn to the left or right.

Times of Operation modules (R9-1), Clause 4.2.12, shall be used in conjunction with these signs when the prohibition applies at certain times only.

4.2.8 All Traffic Turn (R2-14(L) or (R))

R2-14(L)

R2-14(R)

The All Traffic Turn sign may be required for use in conjunction with partial road closures, one-way street systems, or special intersection control arrangements to prohibit drivers from travelling in other than the indicated direction.

4.2.9 ONE WAY (Repeater) (R2-17)

R2-17

The ONE WAY (Repeater) sign is used on long one-way streets to remind drivers that they are on a one-way street. This sign shall not be used closer than 20 m in advance of any intersection.

4.2.10 Speed Restriction (R4-1)

R4-1

The Speed Restriction sign may be required as a repeater sign on an arterial road to face traffic that has just left an area speed limit, to advise drivers of the speed limit on the arterial road.

4.2.11 Speed Limit AREA (R4-10), END Speed Limit AREA (R4-11)

R4-10

R4-11

The Speed Limit AREA sign is used at all the entry points to a local area in which the street environment has been adapted for low vehicle speeds to create an area speed zone. It may also be required as a repeater sign within the zone.

An END Speed Limit AREA sign is used at all exit points from a local area to indicate the ending of the area speed zone.

The application of speed limits to local areas is set out in Clause 3.3.

4.2.12 Supplementary plates

Times of Operation (R9-1-1, R9-1-2)

BICYCLES EXCEPTED (R9-3)

R9-1-1

R9-1-2

Times of Operation modules (R9-1-1 and R9-1-2) shall be used below another regulatory sign, for example, the NO LEFT TURN or NO RIGHT TURN sign (R2-6) when the prohibition applies at certain times only.

R9-3

The supplementary plates BICYCLES EXCEPTED (R9-3) may be used in conjunction with another regulatory sign where it is judged safe for bicycles to make the otherwise prohibited movement.

4.3 WARNING SIGNS

4.3.1 Turn (W1-1(L) or (R))

W1-1(L)

W1-1(R)

The Turn sign is used wherever a street makes a sharp turn that is not readily visible to approaching traffic, e.g. at a diagonal intersection closure (see Figure 3.11(b)).

4.3.2 Roundabout Ahead (W2-7)

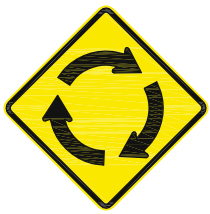

W2-7

The Roundabout Ahead sign is used on the approach to a roundabout where there is poor visibility to the roundabout from that approach.

4.3.3 Road Humps Ahead (W3-4)

W3-4

The Road Humps Ahead sign is used in advance of an isolated hump or at the start of a section of road in which a series of road humps have been installed. The sign is not normally required where the road humps form part of an area-wide LATM scheme.

The NEXT (Distance) . . . m sign (W8-17-2) (see Clause 4.3.8) shall be used to indicate the length of road over which a series of road humps has been installed.

The Road Hump sign (W5-10), in conjunction with the ON SIDE ROAD sign (W8-3) may be used to warn road users approaching an intersection where road humps have been installed along the intersecting street.

4.3.4 Road Hump (W5-10)

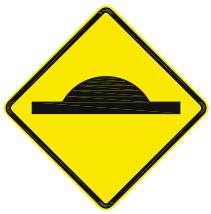

W5-10

The Road Hump sign is used at all types of hump regardless of length or cross-sectional shape but not at a raised pedestrian crossing (zebra) (see AS 1742.10).

It is generally used only at isolated road humps, or at the leading hump in a series of humps in a linear scheme. It is not normally required when road humps form part of an area-wide LATM scheme. It will be required however, at any hump that is more than 120 m from the previous hump or is not clearly visible from the previous hump.

This sign is also used at incidentally occurring humps not part of an LATM scheme (see AS 1742.2).

The Advisory Speed sign (W8-2) shall be used with this sign as described in Clause 4.3.6.

4.3.5 SLOW POINT (W5-33)

W5-33

The SLOW POINT sign is used to indicate a slow point such as a kerb extension, angled slow point, or driveway link.

The Advisory Speed sign (W8-2) may be used in conjunction with this sign to indicate the comfortable speed of negotiation of the slow point.

This sign is for use exclusively in local areas, and shall not be used on any arterial or sub-arterial road.

4.3.6 Advisory Speed (W8-2)

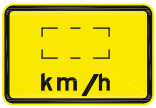

W8-2

The Advisory Speed sign shall supplement the Road Hump sign (W5-10). 20 km/h is the appropriate crossing speed for the road hump profiles shown in Appendix C, Figure C1.

It should also be used in conjunction with a Curve or Turn warning sign (W1 series), and may be used with the SLOW POINT sign (W5-33).

4.3.7 ONE LANE (W8-16)

W8-16

Where a reduction to one lane at a single-lane device is not readily apparent the ONE LANE sign shall be used in conjunction with the Road Hump sign (W5-10) or SLOW POINT sign (W5-33).

4.3.8 NEXT (Distance) . . . . m (W8-17-2)

W8-17-2

The NEXT (Distance) . . . . m sign is used in conjunction with the Road Humps Ahead sign (W3-4) to indicate the length of road over which a series of road humps has been installed.

4.4 GUIDE SIGNS

4.4.1 NO THROUGH ROAD (G5-10)

G5-10

A NO THROUGH ROAD sign should be used where there is possibility that through traffic may enter a dead-end street in error.

The sign is designed for mounting in conjunction with the Street Name sign.

4.4.2 LOCAL TRAFFIC ONLY (G9-40-1)

G9-40-1

The LOCAL TRAFFIC ONLY sign may be used at entry points to a local area where it may not be obvious that the street should only be used by traffic with destinations within that local area.

4.4.3 UNSUITABLE FOR LARGE VEHICLES (G9-41)

G9-41

The UNSUITABLE FOR LARGE VEHICLES sign may be placed at the entry to a local area to warn of the existence of devices or constrictions that may be difficult for large vehicles to negotiate.

4.5 UNIDIRECTIONAL HAZARD MARKERS (D4-1-1, D4-1-2)

D4-1-1

D4-1-2

Unidirectional Hazard markers are used—

(a) to indicate an abrupt narrowing of the pavement, e.g. at a slow point;

(b) to delineate an exposed median end or other roadway obstruction where all traffic must pass to one side; and

(c) to delineate vehicle paths at intersections.

Chevrons may point to the right or the left to indicate the directions vehicles must take at or past the sign.

Hazard markers may not be required if the device and the intended traffic path is clearly visible to approaching drivers at all times.

For the shapes illustrated, both the size of the board and number and spacing of the bands or chevrons may be varied to suit visibility requirements.

4.6 PAVEMENT MARKINGS

4.6.1 General

The pavement markings more commonly used in LATM schemes are described in Clauses 4.6.2 to 4.6.7 inclusive. All such markings are white and shall be reflectorized. Full details of pavement markings are provided in AS 1742.2.

4.6.2 Stop lines

A stop line is a continuous line marked across the traffic lanes approaching a traffic control device at which traffic is required to stop. It indicates the point behind which vehicles are to stop when required. It shall be a minimum of 300 mm wide at a STOP sign and parallel to the line of the intersecting road.

At STOP signs where visibility is restricted, the positioning of the stop line should take into account the driver's line of sight both to left and right, the needs of pedestrians, and the clearance from traffic in the intersecting road.

4.6.3 Give-way lines

A give-way line is a broken line 300 mm wide and shall consist of line segments 600 mm long separated by 600 mm gaps. The line shall be used to indicate the safe position for a vehicle to be held at a GIVE WAY sign or at the entry to a roundabout.

4.6.4 Pavement markings at STOP signs and GIVE WAY signs

The stop and give-way line markings to be used with STOP signs and GIVE WAY signs are illustrated in Figure 4.1.

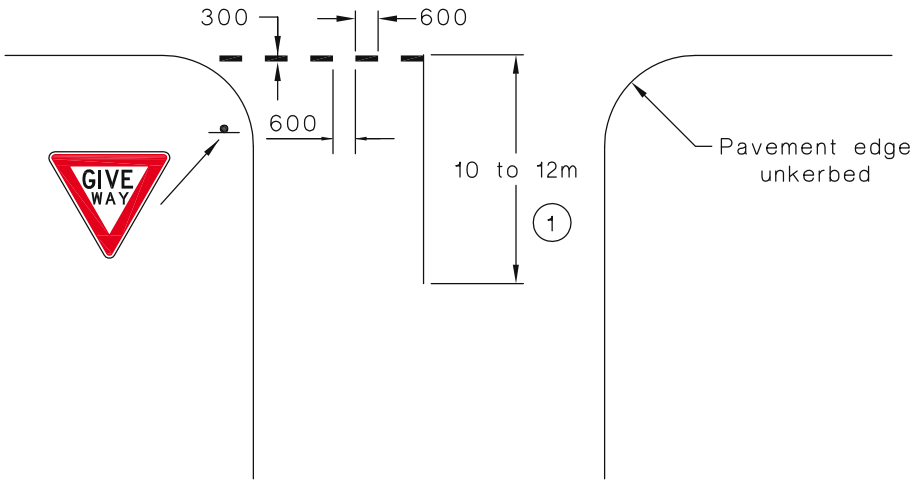

(a) Pavement markings at GIVE WAY signs

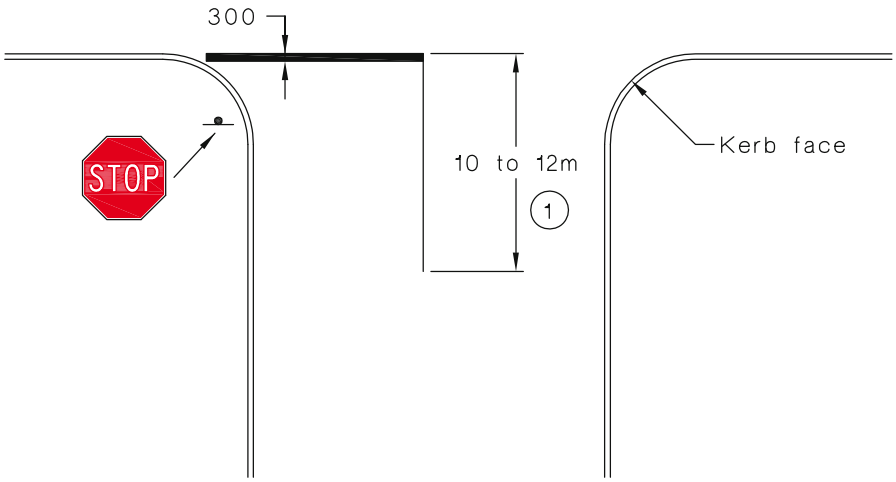

(b) Pavement markings at STOP signs

NOTES:

1 The approach dividing line is required where the width between kerbs or sealed width is 6 m or greater over the length of the line. A special purpose broken dividing line as specified in AS 1742.2, up to 30 m in length may be substituted.

2 A continuity line may be required on the right hand side if the intersection is wide or is on a curve, e.g. see Figure 3.10.

DIMENSIONS IN MILLIMETRES UNLESS OTHERWISE SHOWN

FIGURE 4.1 PAVEMENT MARKINGS AT STOP SIGNS AND GIVE WAY SIGNS

4.6.5 Markings on splayed approaches

The markings at splayed approaches to islands or obstructions shall be parallel bars as shown in Figure 4.2.

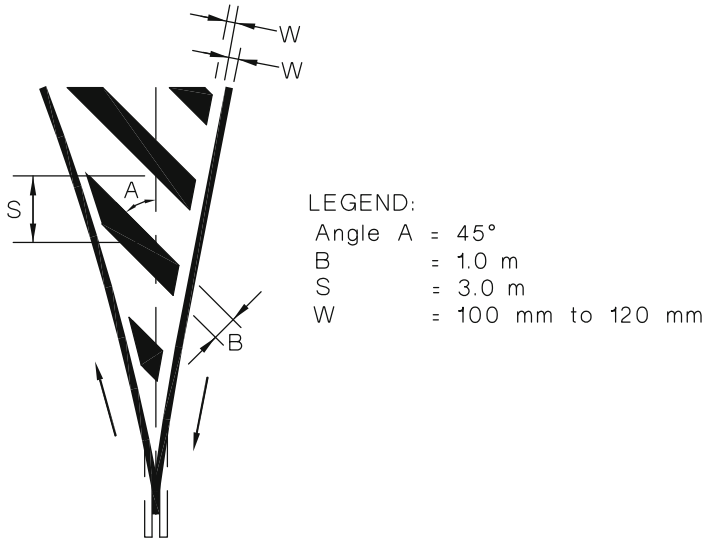

FIGURE 4.2 SPLAYED APPROACH MARKING

4.6.6 Road hump markings

The pavement markings to be used at road humps consist of a marking on each face of the hump in the form of a transverse line with a series of alternate long and short lines at approximately half metre spacing running up the face of the hump. This marking is shown in Figure 4.3.

The marking may be omitted on road humps if a contrasting colour pavement material has been used such that the hump is clearly visible under all conditions. Contrasting pavement material should have similar skid resistance to surrounding pavements for the benefit of bicycles and motorcycles.

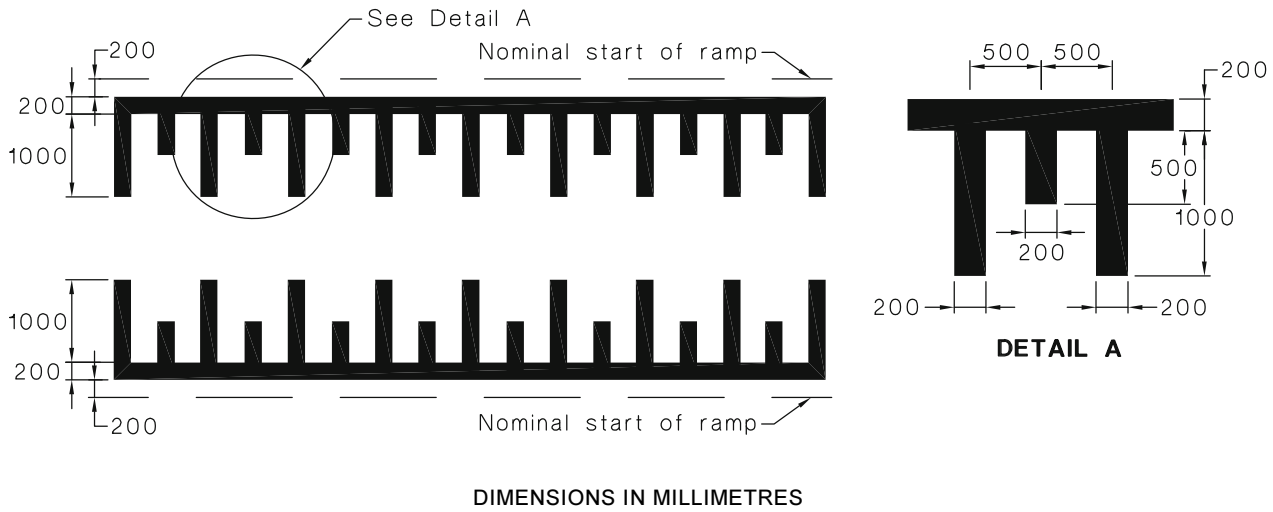

FIGURE 4.3 PAVEMENT MARKING FOR ROAD HUMPS

4.6.7 Raised pavement markers

Raised pavement markers are used to augment painted lines on the road surface. Markers used with the LATM devices described in this Standard shall all be raised reflective pavement markers (RRPM).

Typical uses of RRPMs at LATM devices are to—

(a) supplement the splayed approach marking (see Clause 4.6.5) as shown in Figures 3.5, 3.9 and 3.10;

(b) provide delineation at sharp curves as in shown Figure 3.11(b); or

(c) supplement edge lines on the lead-in to kerb extensions, driveway links and slow points, as shown in Figures 3.6, 3.7, 3.8 and 3.9.

The colours of RRPMs to be used are shown on the Figures referenced above.

APPENDIX A

ILLUMINATION AND REFLECTORIZATION OF SIGNS

(Normative)

A1 SCOPE

This Appendix sets out requirements and recommendations that apply to the illuminating or reflectorizing of signs for night time use.

A2 GENERAL

Signs that are intended to convey their messages during the hours of darkness (except parking signs) shall be either illuminated or reflectorized so that they display the same colours and shape by night as by day. Illumination may be required where reflectorization is judged to be ineffective, for example in areas with high intensity street lighting.

A3 MEANS OF ILLUMINATION

Illumination may be by means of—

(a) a light within or behind the sign face, illuminating the main message or symbol, or the sign background or both, through a translucent material; or

(b) an attached or independently mounted light source designed to direct adequate illumination over the entire face of the sign.

A4 MEANS OF REFLECTORIZATION

Reflectorization is achieved using retroreflective materials complying with AS/NZS 1906.1, and reflectorizing all elements of a sign except black. An account of the performance and function of retroreflective material, together with advice on its selection and use, is also given in AS/NZS 1906.1.

APPENDIX B

INSTALLATION AND LOCATION OF SIGNS

(Normative)

B1 SCOPE

This Appendix sets out requirements and recommendations for the uniform installation and location of signs. It also provides guidelines on the mounting angles required to ensure maximum effectiveness of signs.

B2 UNIFORMITY OF LOCATION

B2.1 General

Signs are normally erected on the left side of the roadway but may be duplicated on the right side or mounted over the roadway if necessary.

Care is needed in locating signs to ensure that they do not obscure one another or otherwise generally obscure visibility, particularly at intersections.

If the sign is located in an exposed position, consideration may need to be given to the use of a frangible or break-away type of construction, or other means of safety protection for the road user at the sign supports.

In addition to the principles set out in Paragraphs B2.2 and B2.3, principles that apply to the individual sign categories and to particular situations are given in the relevant clauses in this Standard.

B2.2 Longitudinal placement

The longitudinal placement of certain signs is fixed by the nature of their message or their characteristic use. Special care is required in the siting of such signs to ensure that they are prominently displayed to approaching drivers. Signs that give advance warning or information shall be located sufficiently in advance to enable the driver to react appropriately.

Generally, there should be not more than one sign of particular type on each post, except where one sign supplements another.

B2.3 Lateral placement and height

B2.3.1 *General*

The following are general requirements for the lateral location and mounting heights of roadside signs. The lateral placement is measured from the edge of the sign nearest the road, and the height from the underside of the sign or the lowest sign in an assembly of signs.

These requirements apply to signs of a permanent nature, and include signs for roadworks and special purposes where these are mounted on posts set into the ground. Any variations for a particular sign is given in the clause relating to that sign.

There may, however, be exceptions where conditions do not permit these requirements to be applied. In these cases, the placement or height is adjusted to meet these special conditions, e.g. the height of a sign may be increased or decreased to avoid obstructing sight distance at an intersection.

B2.3.2 *Lateral placement*

On kerbed roads in urban areas signs shall be located back from the face of the kerb not less than 300 mm. Where mountable or semi-mountable kerbs are used, e.g. on traffic islands, the minimum clearance should be 500 mm wherever practicable.

In local streets the lateral clearance may be reduced provided that the signs remain within the width of the island or median and that they are mounted on supports that will allow them to recover their position if knocked or run over.

B2.3.3 *Height*

In urban areas on kerbed roads the sign shall be set a minimum of 2 m above the top of the kerb to prevent obstruction to occasional pedestrians not normally expected in that vicinity, or to reduce interference from parked vehicles.

Where neither pedestrians nor parked vehicles have to be considered, e.g. on a traffic island or median, the height may be reduced to 1.5 m. KEEP LEFT signs and hazard markers on medians and traffic islands may need to be mounted as low as 0.5 m. The possible need for increased maintenance cleaning, together with possible sight distance obstruction to pedestrians or oncoming traffic should be considered. Signs that overhang a footway or bicycle path shall have a minimum height of 2.5 m above the level of the footway.

B3 INSTALLATION/ORIENTATION

Signs should be oriented at approximately right angles to, and facing, the traffic they are intended to serve. At curved alignments, the angle of placement should be determined by the course of approaching traffic rather than by the road edge at the point where the sign is located.

To eliminate possible and undesirable specular reflection from the surface of the sign, it should be turned about 5 degrees away from the normal to the headlight beam (see Figure B1). After signs have been installed it is good practice to test them by trial approach runs in a motor vehicle both by day and night.

Environmental aesthetics should not be overlooked when installing signs.

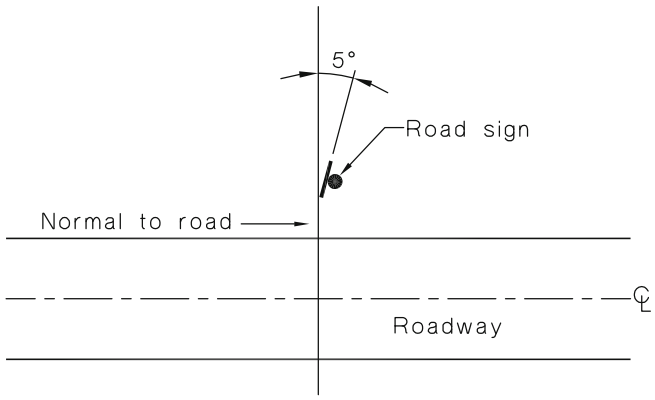

FIGURE B1 METHOD OF AVOIDING SPECULAR REFLECTION ON A ROAD SIGN

APPENDIX C

REQUIREMENTS AND GUIDELINES FOR THE DESIGN AND USE OF LATM DEVICES

(Normative)

C1 GENERAL

The following requirements and recommendations apply to all LATM devices:

(a) Road humps and slow points shall be safe for negotiation by all road users including cyclists and any pedestrians that are likely to come in contact with the devices. They should not be located on grades steeper than 5% or on curves of radius less than 500 m.

(b) Devices shall be capable of being negotiated by all vehicles likely to encounter them. All devices shall have semi-mountable or fully mountable kerbs. Provision for occasional large vehicles, e.g. emergency vehicles, delivery and garbage trucks, should be by means of fully mountable devices or parts of devices that can be occasionally driven over.

(c) Devices and the path through, around or over them should be clearly visible to approaching road users under all reasonably expected conditions. Provision of adequate sight lines together with lighting and retroreflective delineation for night conditions need to be considered.

(d) Within controls imposed by existing street lighting, drainage structures, driveways and services, devices should be spaced apart for best effect on driver behaviour. Spacings between 80 and 120 m are recommended.

(e) Devices on bus routes should be designed and positioned to minimize discomfort to passengers. Buses on regular routes should not be required to mount kerbs.

C2 ROAD HUMPS

C2.1 Location

Road humps are generally best used in streets where all of the following conditions apply:

(a) In local areas with a local or limited collector function.

(b) Where a speed limit of 50 km/h or less applies.

(c) Where the traffic volumes are less than 400 vph in the peak hour.

(d) Where truck (4.5 tonne GVM or greater) volumes are less than 50 vpd.

(e) Where the longitudinal gradient of the road is less than 5 percent.

(f) Where the road does not form part of an important access to a commercial development.

(g) Where that part of the road is not used extensively for access to emergency service establishments, high density residential developments or public meeting places.

(h) Where the road does not form part of a bus route unless steps are taken to minimize discomfort to passengers, e.g. use of long flat-top humps with minimum grade on the ramps.

C2.2 Siting

For best effect and public acceptance road humps should be sited in accordance with the following guidelines:

(a) The first hump should be within 100 m of the start of the street so that the approach speed of vehicles is naturally low, but should be clear of arterial road intersections so that turning movements from the arterial are not interfered with.

(b) Humps need to be clear of driveway entrances.

(c) Sight distance, commensurate with an operating speed of 60 km/h, should be available to traffic.

(d) Humps should be installed at right angles to the direction of travel.

(e) Hump spacing should be between 80 m and 120 m.

(f) Humps should extend laterally across the full width of road pavement available to traffic (except for an allowance for drainage and cyclists).

NOTE: In cases where the hump does not extend fully to the kerbside, experience has shown that many drivers choose to drive with the two left wheels off the hump.

(g) Humps should be illuminated to ensure that they are visible at night.

C2.3 Road hump profiles

Profiles of the two hump types specified in the Standard shall be as shown in Figure C1.

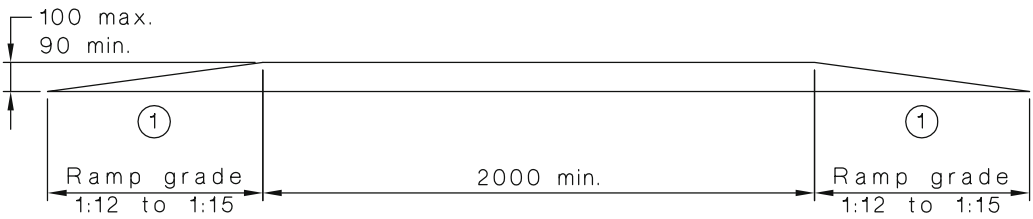

DIMENSIONS IN MILLIMETRES

a) Flat top hump

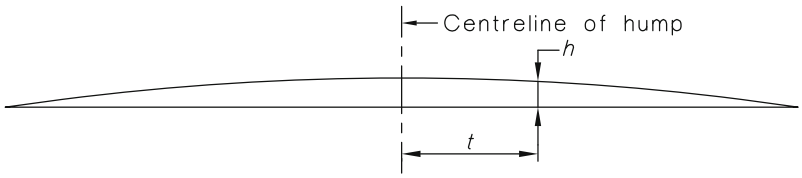

t (m)	0	0.1	0.2	0.3	0.4	0.5	0.6	0.7	0.8	0.9	1.0	1.1	1.2	1.3	1.4	1.5	1.6	1.7	1.8
h (mm)	100	100	99	97	95	93	90	86	81	76	71	65	58	51	43	34	25	16	5

b) Watts profile hump

NOTES:

1 At ramps at entry points to shared zones (see AS 1742.4) the ramp grade shall be increased to between 1 in 2 and 1 in 4.

2 The profile of a raised pedestrian crossing (zebra) or 'wombat crossing' is different from these profiles, see AS 1742.10.

FIGURE C1 ROAD HUMP PROFILES

C3 SLOW POINTS AND PARTIAL ROAD CLOSURES

Some general dimensions considered appropriate at these devices are as follows:

(a) Pavement narrowings—

(i) single lane — 2.5 m between kerbs;

— 2.75 m between vertical obstructions higher than 200 mm above pavement level; and

(ii) two lane — 5.0 m minimum between kerbs.

(b) Bicycle lanes (including where adjacent to pavement narrowings)—1.35 m minimum.

(c) Width of clear sight path through a slow point—1.0 m maximum.

(d) Clear passage for design car—to be checked if necessary by turning template.

Dimensions of the mountable area required for the occasional manoeuvring of large vehicles should also be determined by using relevant turning templates.

C4 ROUNDABOUTS

Refer to Austroads: *Guide to Traffic Management, Part 6: Intersections, interchanges and crossings* for the design of roundabouts.

NOTES

Standards Australia

Standards Australia develops Australian Standards® and other documents of public benefit and national interest. These Standards are developed through an open process of consultation and consensus, in which all interested parties are invited to participate. Through a Memorandum of Understanding with the Commonwealth Government, Standards Australia is recognized as Australia's peak non-government national standards body. Standards Australia also supports excellence in design and innovation through the Australian Design Awards.

For further information visit www.standards.org.au

Australian Standards®

Committees of experts from industry, governments, consumers and other relevant sectors prepare Australian Standards. The requirements or recommendations contained in published Standards are a consensus of the views of representative interests and also take account of comments received from other sources. They reflect the latest scientific and industry experience. Australian Standards are kept under continuous review after publication and are updated regularly to take account of changing technology.

International Involvement

Standards Australia is responsible for ensuring the Australian viewpoint is considered in the formulation of International Standards and that the latest international experience is incorporated in national Standards. This role is vital in assisting local industry to compete in international markets. Standards Australia represents Australia at both the International Organization for Standardization (ISO) and the International Electrotechnical Commission (IEC).

Sales and Distribution

Australian Standards®, Handbooks and other documents developed by Standards Australia are printed and distributed under license by SAI Global Limited.

For information regarding the development of Standards contact:
Standards Australia Limited
GPO Box 476
Sydney NSW 2001
Phone: 02 9237 6000
Fax: 02 9237 6010
Email: mail@standards.org.au
Internet: www.standards.org.au

For information regarding the sale and distribution of Standards contact:
SAI Global Limited
Phone: 13 12 42
Fax: 1300 65 49 49
Email: sales@sai-global.com

STANDARDS
Australia

ISBN 0 7337 9295 2